Application Guidance Notes: Technical Information from Cummins Generator Technologies

AGN 093 - Excitation System

OVERVIEW

An alternator's excitation system for a typical modern alternator would have the following features:

- Rotating field: excitation rotor, rectifier unit and main rotor turning within the main stator. The output power is generated and taken from the main stator.
- Brushless: The field is generated by the exciter, rectified to dc and induced into the main rotor winding.
- Voltage regulation is controlled by a solid state (electronic) analogue Automatic Voltage Regulator (AVR) or digital AVR, depending on the model.
- The AVR may be powered directly from the alternator's output or from an independent source. The independent source may be, a Permanent Magnet Generator (PMG) or an Auxiliary Winding.

The excitation system shown in the block diagram on the next page can be identified as consisting of:

- Main Rotor
- Exciter Armature
- Rotating Rectifier Unit
- Exciter Field
- AVR
- Independent power supply from PMG

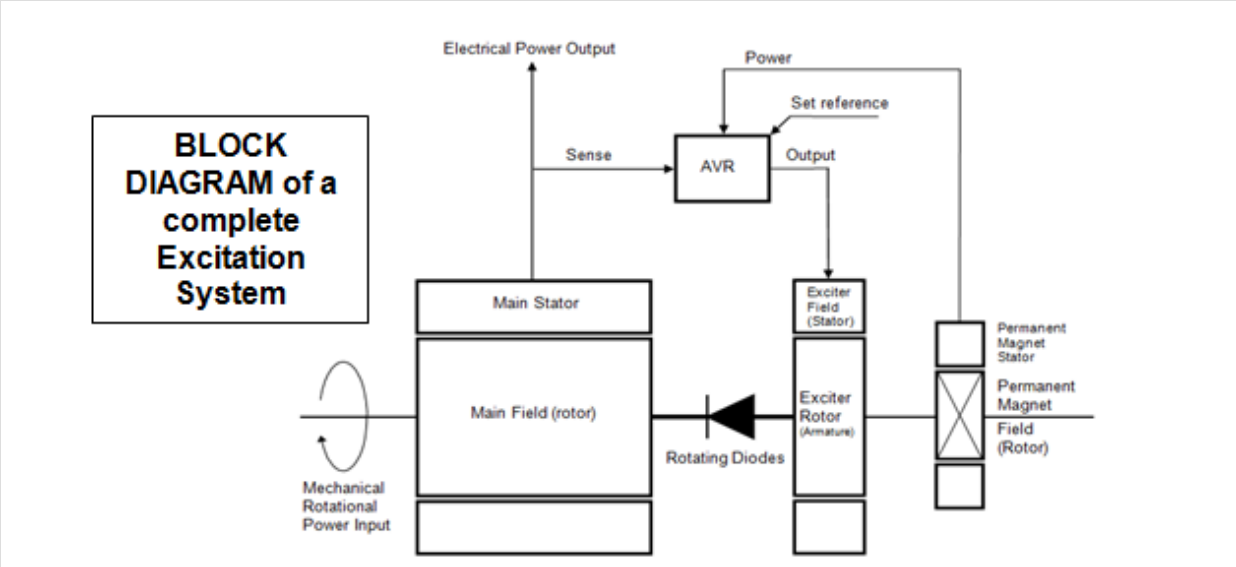

Block Diagram of a complete Excitation System for a Brushless Alternator

THE EXCITATION SYSTEM IN OPERATION

The high power levels required by the main rotor winding are provided by the exciter armature and its associated rotating diode assembly. Control of the current within the main rotor field winding is achieved by controlling the voltage generated within the exciter armature. Operating the exciter armature at the correct voltage – therefore the main rotor winding at the correct magnitude of magnetising Ampere Turns - is achieved by the AVR dynamically regulating the level of current within the exciter field winding.

In the above block diagram, the AVR is shown being powered from a Permanent Magnet Generator. There are alternative power source schemes, the most common being described in the last section of this overview, titled 'The source of the power supply to the AVR varies'.

The AVR's dynamic output to the exciter field winding is a function of an internal closed loop control system, which involves continuously sensing the stator winding output voltage, then comparing this voltage with the 'set' voltage level in the AVR. Maintaining the sensed output voltage balanced with the AVR's set voltage, is a continual process with the system correction capable of 97% of target voltage with 300ms.

The above components and their collaboration towards controlling the output voltage of an alternator are described in the following sections.

Main Rotor

Around each of the rotor's laminated salient poles are directionally wound coils, which form the basis of an electro-magnetic system. Current flowing through the rotor poles contra-directional coils create a magnetic field within the complete rotor assembly, with adjacent poles being magnetically polarised of opposite polarity; as seen in the diagram on the next page; note N-S-N-S polarity.

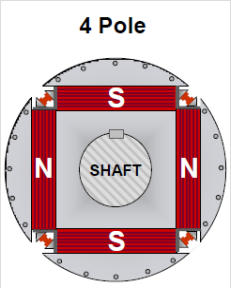

Main Rotor – 4 poles

With the rotor positioned within the alternator stator bore, magnetic flux emanating from each rotor pole will cross the air-gap between the rotor pole and stator core. Then continue onwards; developing a circumferential magnetic path within the stator in both clock and anti-clock directions heading towards adjacent rotor poles, which by being of opposite magnetic polarity are attracting the flux to then re-cross the rotor/stator air gap and complete the magnetic circuit within the rotor.

The strength of the magnetic field is product of the current flowing through the rotor winding coils. The optimum strength (flux-density) is set by several factors, which include the chosen electrical steel, the rotor speed and number of poles, and the need to avoid excessive saturation of the diverse paths within the magnetic circuit.

With the rotor assembly spinning within the bore of stator core pack, the magnetic flux emanating from the rotor poles is in constant motion relative to any fixed point identified within the stator bore, which for example is a stator winding slot. Furthermore, relative to that fixed point (stator slot) the magnetic polarity is constantly changing as the North then South then next North then next South, and so on; continually passing that stator slot point.

The combination of the number of rotor poles, combined with the rotor's rotational speed will set the time period for which the magnetic flux polarity, relative to a stator winding slot, changes from maximum linkage by a North Pole to maximum linkage by a South Pole. This time period relationship sets the quite familiar values for alternator driven rotational speeds and related electrical output in terms of alternating current (ac) values that align with international electrical system frequencies. For examples: an alternator generating power at a frequency of 50Hz, requires a 4 pole rotor to run at 1500rpm and a 6 pole to run at 1000rpm.

The above describes how the rotor's magnetic field subjects the stator windings to a polarity changing pulsating magnetic flux. The 'strength' of the magnetic field is controlled by the level of current within the rotor pole windings. More current equals a stronger magnetic field in almost a proportional relationship until magnetic flux path saturation begins to occur.

Having set the rotor's rotational speed to satisfy the required output frequency, the control over the level of alternator output voltage is a function of the strength of the magnetic flux emanating from the rotors magnetic field. The AVR controls and so maintains, the correct level of alternator output voltage by the process explained previously.

Main Rotor Winding

The design of the main rotor will depend on the speed at which the rotor will turn and the frequency – 50Hz or 60Hz – required. Other related technical aspects are as follows:

- Rotor winding resistances are typically in the region of 2 to 3 ohms.

- The current within the rotor coils will vary according to the size of alternator and the level of electrical output kVA/kW being delivered. Rotor current levels ranging between 10 and 150A are typical for alternators over a range of designs suitable for 5 to 2500kVA, for normal rated load conditions. This can rise to 250A under momentary overload conditions. Examples being; during motor starting, or electrical distribution system fault clearing.

- Rotor construction allows short term operation under an over-speed condition, to a maximum of 1.25 x the maximum rated speed. For example, 4 pole rotors that are designed for both 50Hz (1500rpm) and 60Hz (1800rpm) alternators have an over-speed limit of 1.25 x 1800 = 2250rpm.

<u>Automatic Voltage Regulator (AVR)</u>

An AVR is also known as a Voltage Control Unit (VCU). The AVR has two electrical inputs and one electrical output, plus an internally derived set reference voltage, described as follows:

- Input 1. The sensing of the alternator's operating level of output voltage
- Input 2. The AVR's power supply.
- Output 1. The AVR output that becomes the input to the exciter stator field winding.
- The set reference voltage is an electronically derived reference created within the AVR's circuitry. This is set to the required output voltage from the alternator.

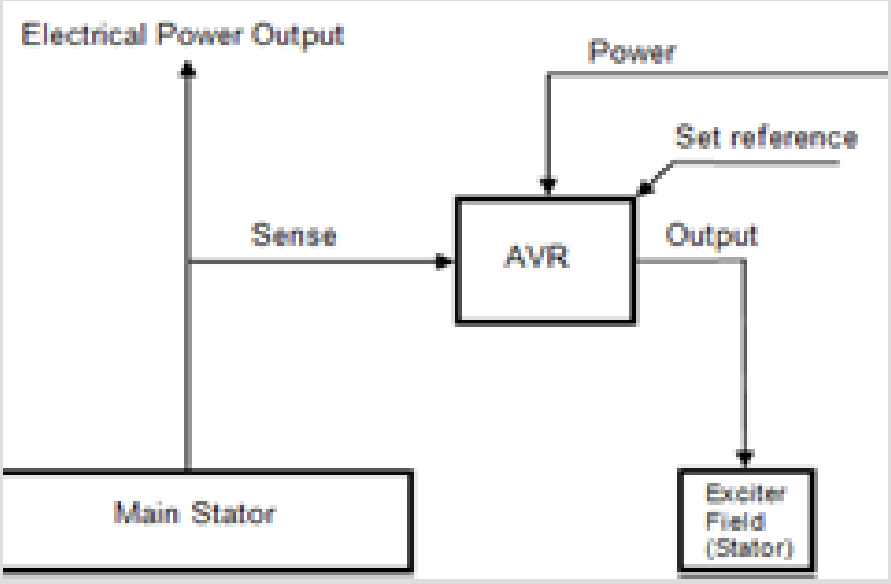

The source of the AVR's power-supply

Self-excited alternators. Cost effective schemes will use the leads providing the voltage sensing input to also provide the AVR with its power supply. This scheme is often referred to as shunt excited. It has an inherent feature that limits alternator performance, which only becomes evident under gross overload conditions. Examples being the Direct-on-Line starting of an excessively large electric motor, or associated with a distribution system fault involving the shorting together of all three phases. Such gross overload conditions cause the alternator's output voltage to become much reduced. Consequently a reduced power level is available for the AVR, which in turn reduces the excitation power available for the exciter field. The net result is, the alternator output voltage collapses.

Separately excited alternators. A scheme whereby the AVR's power supply is derived from an independent source. Such schemes will enable the alternator to sustain a degree of gross overload along with providing a steady state fault current to facilitate protection system discrimination.

Auxiliary windings embedded within the stator winding assembly can be configured to detect and benefit from changes in behaviour of the air gap flux over the varying levels of allowable continuously rated output kVA. Furthermore, amplify the AVR power supply voltage level should the alternator be subjected to gross overload or distribution system related fault conditions.

For a totally isolated and independent power supply, the use of a 'pilot exciter' in the form of a small shaft mounted Permanent Magnet Generator (PMG) offers subtle benefits over auxiliary stator winding systems. This totally isolated system enables an easy up-fit option for an existing alternator where changing the PMG is a simple task should an in-service issue arise.

The AVR operating system

AVR's operate with a PID (Proportional – Integral – Derivative) closed loop control system. In easier-to-understand terms; when the alternator output voltage differs from the set level, the AVR's control function is aware of an 'error' resulting in the **Proportional** element making a change to the AVR output in proportion to that 'error'. For as long as that 'error' is present, the **Integral** element will continuously increment or decrement the AVR's output to rectify that 'error'. The rate-of-change of the 'error' is recognised by the **Derivative** element, which then provides an input to the complete control loop to help damp the 'error' swing and so facilitate stability.

Traditionally, the process employed was an analogue system. More recently, the digital system has become a very popular scheme for AVR's to control the alternator's output voltage level. Furthermore, the digital system offers operational technical benefits along with the ability to support extra features and functions.

For further reading there is a library of documents in a specific section covering AVR's on the website – www.stamford-avk.com

Exciter

In the following diagram, the exciter is correctly depicted as a rotating electrical assembly, located within the alternator, with the exciter armature attached to the alternator shaft. The exciter rotor is located adjacent to the main rotor and is electrically separated by the rotating rectifier unit. The AVR is shown connected to the exciter stator's static field winding assembly by the pair of dc current leads identified as F1 +ve and F2 –ve:

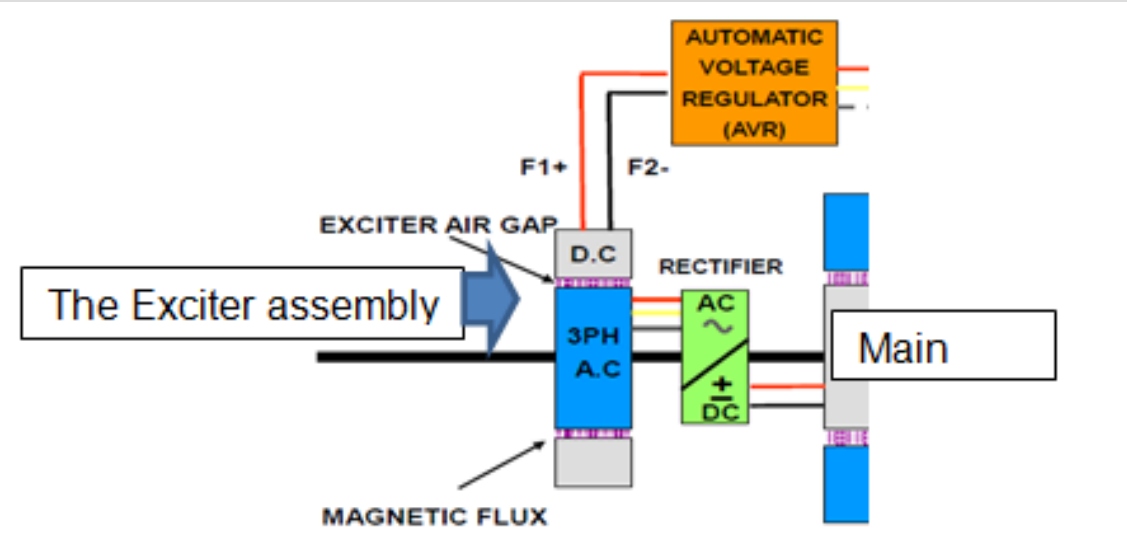

Exciter and Rectifier Unit

The control function behaviour of the AVR has been explained in preceding sections, along with the principles of electro-magnetic field paths - created by 'field' windings - which cross the air gap within rotating electrical machine and generate a voltage in the windings, which become subjected to the Field winding's magnetic flux paths.

Within the exciter the rotating component known as the exciter armature - sometimes referred to as the exciter rotor – has a core pack constructed of laminated electrical steel in which are radial slots close to its periphery designed to allow the incorporation of a 3-phase winding system designed to operate with an electrical output dedicated to provide an optimum match of voltage and current to meet the needs of the main rotor winding and the main electrical machines excitation needs, as described in the 'Rotor' section.

The exciter operates as a mechanical power amplifier to support an alternator under full rated load condition, with the following typical features:

- The electrical input provided by the AVR will be measured at levels that are only some 200 to 400 Watts
- The power demanded by the main rotor winding may well be 8 to 15kW
- The engine provides the amplification power.

The ac voltage generated within the exciter armature is likely to be 2.5 to 3.5 times the frequency of the alternator's main output and the exciter field windings operate as a dc current assembly. This makes them very susceptible to airborne contamination, particularly the corrosive growth of verdigris.

Rectifier Unit - Rotating Diode Assembly

The diodes within the rotating diode assembly are carefully selected to ensure their current carrying capability, along with their voltage withstand capability, has an operating safety margin when compared with the designed exciter and main field winding operating levels.

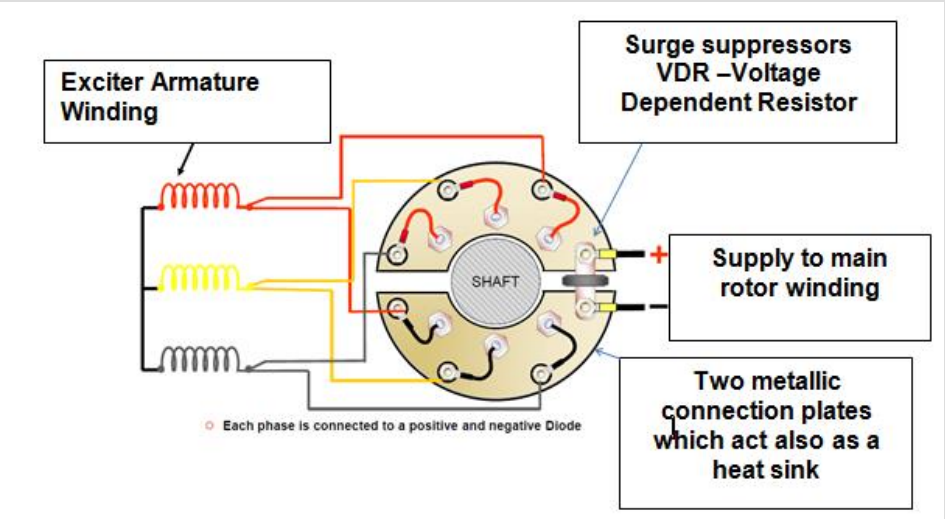

Rectifier Unit - Rotating Diode Assembly

The diodes are connected as a 3 phase full wave bridge, for which a more conventional circuit is now shown to help understand why each of the phase windings has two leads.

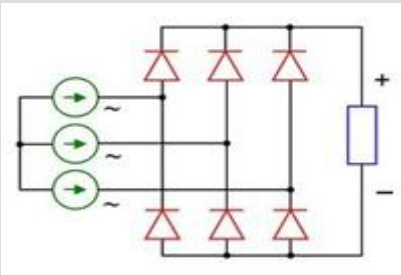

Three Phase Full Wave Bridge

The rotating diodes can be subjected to stressful operating conditions associated with load step changes to the alternator output. Perhaps the worst condition is during the 'rough' synchronising of parallel running Generating Sets.

The diodes used are selected to be suitable for the following operating conditions:

- To enable monitoring of the diode assembly, to detect a diode failure condition. An independent Diode Failure Detection Module (DFD) is available as an optional accessory.
- The DFD is connected in series with the AVR output to the exciter field and detects an unusual 'ripple-content' that occurs when a diode has failed - an 'open circuit' fault.
- A diode failing with a 'short-circuit' fault, results in an overload on the exciter armature windings and consequently an inability of the main winding to operate at rated voltage. The AVR attempts to compensate by increasing the current in the exciter field windings, but this overcurrent output from the AVR triggers an AVR shutdown by the 'over-excitation' function.

Testing Rotating Diodes

Whilst it is acceptable to use a multi-meter – resistance measuring mode - as the first part of the process to identify if a diode is serviceable, the only certainty is that this test will identify a diode that is either short circuit or open circuit.

A multi-meter – diode test or resistance mode - will <u>not</u> deliver a voltage high enough to determine if the diode's P-N junction is able to block current flow in the reverse polarity direction, when that diode is subjected to the voltage levels associated with operating working conditions.

The practical method of testing a diode's reverse voltage blocking capability involves subjecting the suspect diode to a bench test. Using a safe 240V 50Hz mains supply, the diode is connected in series with a 240V (nominally) 40W filament light bulb.

The diode is serviceable if the bulb illuminates at half brilliance with a flickering effect, which indicates the bulb is obviously only being supplied with power for every half cycle that is aligned with the diodes forward conducting direction.

The diode is unserviceable if the bulb illuminates at full brilliance showing no signs of 'flickering'.

Protection for the Rotating Diodes

Basically, Voltage Dependent Resistors (VDR's) and Metal Oxide Varistors (MOV's) are a 'Pepper and Salt' mix of carbon materials that has a high resistance until subjected to a high pressure [Voltage]. It then becomes a low resistance path to bleed away excessive pressure - by allowing lots of amps to momentarily flow through the VDR, which has become a momentary low resistance path. This means that the rating of the device based on it only being asked to conduct for VERY short period of time and VERY intermittently. A VDR that is continually 'clipping' excessive voltages will get hot and fail.

So a VDR is carefully chosen to protect the diodes from being subjected from a damaging level of Peak Inverse Voltage [PIV], which would otherwise breakdown the diodes P-N junction, and so make it a non-rectifying short circuit.

First you choose the diode type by carefully considering the current rating and normal operating levels of PIV, and then you offer the solid state devices protection by a carefully chosen VDR. When VDR's start to have problems, then this, like a blowing fuse in a simple electrical circuit, is the first sign that some form of abnormal situation is occurring with the alternator's duty.

A load related situation that causes a transient over current, or over voltage situation within the stator winding. This will by mutual inductance, generate a high voltage transient in the rotor winding, which the VDR will attempt to eradicate by 'clipping', and so safeguard the rotating diodes from a damaging level of PIV. The additional mechanism that will compound the above-described situation is when there is a sudden change of rotor angular position relative to the stator. This could be due to a large load step change, resulting in a large rotor positional load angle change. But the most common situation for this scenario is a sudden rotor positional change resulting from a Generating Set being paralleled at a phase angle greater the recommended the displacement [absolute max is +/- 10 electrical degrees].

So, when the AvK and STAMFORD alternator design engineers specify a VDR that will offer the required protection for a rotating diode assembly, the decision process takes into account the Clamping Voltage, Voltage - Current curves, Maximum Energy rating, and Power Dissipation. Then, most importantly, Mechanical construction for its life on a spinning assembly. The VDR energy absorption required on a STAMFORD S6 and P7 (S7) alternator for example, requires a matched pair of VDR's to be fitted to help with rotating diode assembly centrifugal stresses and rotor balance considerations. Note; It is imperative that if one VDR of a matched pair fails, both must be changed for another matched pair and in storage matched pairs are never separated.

With regard to technical data; the VDRs used on the HC range are Z500PS single's on the S4 and HC5 (S5) alternators and same device but matched pairs on S6 and P7 (S7) alternators. Each device has a max energy of 420J and a clamp voltage of 1420V @ 100A. As the S6 and P7 (S7) alternators have two such devices in parallel, the energy rating is doubled. The 1mA voltage is 800V.

The engineering design process to get the right VDRs to protect the diodes, was based on acceptable extremes of alternator operating conditions. It is strongly recommended that no alternative VDRs are used. This position is confirmed by the 10's of 1000's of Generating Sets operating in the field, not having VDR problems.

For information on VDRs for other AvK and STAMFORD alternators, contact Application Engineering on applications@cummins.com.

If an alternator's VDR's are 'blowing', that alternator is being subject to a stressful, life-shortening, mode of operation, which may be the result of poorly commissioned equipment, or badly trained operators.

In the industry, there is a condition known as Diode 'snap-off'. This is not a problem with AvK and STAMFORD alternators, because we don't force-off /quench main rotor energy at Load Off step changes. The main rotor field current is allowed to decay and, because even the biggest AvK alternator is small in real generator terms, the field time constant and energy are

small values.

Under a pole-slip, the relative sudden angular change between rotor and stator will cause massive changes to the alternator's internal energy. Therefore, large changes to stator current levels and the cumulative effect of both stator ampere turns. The pole slip angular change will induce into the rotor winding, a high voltage. This will promote VDR clipping. It is then the duration of the clipping, driven by the duration of the most undesirable pole slipping that decides the ability of the VDR to survive or become sacrificial with duty role. We don't want an alternator to be subjected to pole slipping, and neither does the Generating Set operator. If it happens, it is negligence on the part of the operator or Generating Set control system. To offer alternators fitted with VDRs rated for such extreme conditions would not be practicable.

Under fault conditions - overload - short circuit - the stator current ampere turns and rapid air gap flux changes in the time zero Sub-transient time zone, would no doubt cause the VDR to become active. From experience, a single short circuit applied to an alternator will not in itself cause the VDR to fail. But subject the alternator to a sequence of overloads/faults simulating a very poorly designed cascading protection system, or a micro-interruption when in parallel with a mains supply, and then the VDR will self-destruct.

The energy absorption capability of the VDR is a tight line between what is required for adequate diode protection for acceptable abnormal conditions and then, how much bigger in energy rating /physical size can the VDR be and still fit in the available space on the rotating diode assembly.

Under gross overload conditions, with the AVR at its ceiling voltage and exciter saturated. The exciter armature L-L voltage would be in the order of 150V rms, but it is not excitation Voltage that generates diode damaging PIV levels, it is stator winding activity and resulting mutual inductance of the step-up turns ratio of stator to rotor winding.

EXCITATION VALUES

Exciter voltage and current values are often requested. The following table lists values for STAMFORD alternators fitted with the standard Winding 311 / 312 / 12, unless stated otherwise.

		No Load		Full Load	
Frame	**Resistance (Ω)**	**Voltage (V)**	**Current (A)**	**Voltage (V)**	**Current (A)**
S0L1-D1	**14**	**10**	**0.71**	**40**	**2.2**
S0L1-H1	**14**	**11**	**0.79**	**41**	**2.4**
S0L1-L1	**17.6**	**13**	**0.74**	**53**	**2.5**
S0L1-P1	**17.6**	**13**	**0.74**	**56**	**2.6**
S0L2-F1	**14.6**	**13**	**0.89**	**47**	**2.6**

		No Load		Full Load	
Frame	Resistance (Ω)	Voltage (V)	Current (A)	Voltage (V)	Current (A)
S0L2-G1	14.6	13	0.89	47	2.7
S0L2-M1	15.4	13	0.84	51	2.7
S0L2-P1	16.1	13	0.81	50	2.5
S1L2-J1	16.4	13	0.79	48	2.5
S1L2-K1	15.5	15	0.97	52	2.7
S1L2-N1	14.4	18	1.25	47	2.8
S1L2-R1	14.7	13	0.88	50	2.9
S1L2-Y1	16	14	0.88	53	2.8
P 044D	19.5	12	0.62	52	2.2
P 044E	19.5	13	0.65	52	2.2
P 044F	18.5	13	0.7	52	2.2
P 044G	18.5	13	0.7	52	2.2
P 044H	18.5	13	0.7	52	2.2
P 144D	19.5	14	0.7	52	2.2
P 144E	20.5	14	0.7	52	2.2
P 144F	21.5	14	0.65	52	2.2
P 144G	22	14	0.63	52	2.2
P 144H	25	13	0.52	52	2.2
P 144J	25	12	0.48	52	2.2
P 144K	23.5	12	0.51	52	2.2
UC 224C	21	10	0.48	37.5	1.79
UC 224D	21	10	0.48	37.5	1.79
UC 224E	20	10	0.5	36	1.8
UC 224F	20	10	0.5	36	1.8
UC 224G	20	10	0.5	36	1.8

		No Load		Full Load	
Frame	Resistance (Ω)	Voltage (V)	Current (A)	Voltage (V)	Current (A)
UC 274 (C, D, E, F, H cores)	20	10	0.5	36	1.8
UC 274G	20	10	0.5	46	2.1
S4L1D-C41	18	12	0.7	43	2.4
S4L1D-D41	18	12	0.7	41	2.3
S4L1D-E41	18	12	0.7	41	2.3
S4L1D-F41	18	10	0.7	41	2.3
S4L1D-G41	18	12	0.7	48	2.6
S4L1S/M & HC 4 (all cores)	18	10	0.56	42	2.3
S5L1D-C	17	9.4 to 10.2	0.5 to 0.6	44	2.6
S5L1D-D	17	8.7 to 9.5	0.55 to 0.6	44	2.6
S5L1D-E	17	8.7 to 9.0	0.56 to 0.58	44	2.6
S5L1D-F	17	8.5 to 9.9	0.54 to 0.62	44	2.6
S5L1D-G	17	10.7 to 11.4	0.56 to 0.66	44	2.6
S5L1D-H	17	9.1 to 10.1	0.52 to 0.58	49	2.8
S5L1S/M & HC 5 (all cores)	17	9	0.53	44	2.6
S6L1D/M-C	18.47	12.9 to 14	0.74 to 0.8	59	2.9
S6L1D/M-D	18.47	15.2 to 16	0.82 to 0.87	59	2.9
S6L1D/M-E	19.56	13.5 to 13.6	0.68 to 0.69	62	2.8
S6L1D/M-F	19.56	12.3 to 12.9	0.55 to 0.68	53	2.6
S6L1D/M-G	19.56	11.2 to 11.9	0.56 to 0.59	58	2.7
S6L1D/M-H	19.56	14.2 to 15.6	0.71 to 0.76	66	2.9
HC 6 (all cores)	17	11	0.65	58	3.4

		No Load		Full Load	
Frame	Resistance (Ω)	Voltage (V)	Current (A)	Voltage (V)	Current (A)
S7L1D/M-C	22.3	13.3 to 13.8	0.58 to 0.61	70	2.8
S7L1D/M-D	22.3	14.8 to 15.6	0.67 to 0.7	63	2.7
S7L1D/M-E	22.3	14.7 to 15.4	0.64 to 0.68	58	2.6
S7L1D/M-F	22.3	14.7 to 15.4	0.64 to 0.68	64	2.8
S7L1D/M-G	22.3	14.7 to 15.4	0.62 to 0.67	73	2.9
S7L1D/M-H	20.1	14.5 to 15.9	0.74 to 0.81	62	2.9
S7L1D/M-J	20.1	17.3 to 17.8	0.86 to 0.88	77	3.2
P734A - F	17.5	12	0.69	63	3.6
P734G	16	11	0.69	60	3.75
S9H1D/M-B Wdg 83	9.8	10.9	0.99	41.9	3.81
S9H1D/M-C Wdg 83	9.8	11	1	41.8	3.8
S9H1D/M-D Wdg 83	9.8	11.4	1.03	43.3	3.93
S9H1D/M-E Wdg 83	11.2	11.1	0.9	44.8	3.63
S9H1D/M-F Wdg 83	11.2	11.4	0.92	45.9	3.71
S9H1D/M-G Wdg 83	11.2	12.3	1	45.1	3.65
S9H1D/M-H Wdg 83	11.2	12.4	1	46.7	3.78
S9H1D/M-B Wdg 91	9.8	11.2	1.02	38.5	3.5
S9H1D/M-C Wdg 91	9.8	11.2	1.02	39.2	3.56
S9H1D/M-D Wdg 91	9.8	11.7	1.06	39.5	3.6
S9H1D/M-E Wdg 91	11.2	11.4	0.93	40.7	3.29

		No Load		Full Load	
Frame	Resistance (Ω)	Voltage (V)	Current (A)	Voltage (V)	Current (A)
S9H1D/M-F Wdg 91	11.2	11.6	0.94	40.7	3.29
S9H1D/M-G Wdg 91	11.2	12.5	1.01	40	3.24
S9H1D/M-H Wdg 91	11.2	12.4	1	40.2	3.26
LV 804	20	15	0.75	65	3.25
MV 804	20	18	0.9	60	3
HV 804	20	18	0.9	60	3

Notes

- The excitation voltage will vary with changes to power factor and alternator output voltage. The above excitation values can only; therefore, be considered as general.
- Generally, the alternator's output voltage is considered to be at mid-flux, at 415V. If the alternator's output voltage changes, up or down, the excitation voltage will also change, up or down.
- Design engineers expect the excitation voltage at Series Star and Parallel Star to be the same, but from experience, excitation voltage will be slightly higher for the Parallel Star connection.

Application Guidance Notes are for information purposes only. Cummins Generator Technologies reserves the right to change the contents of Application Guidance Notes without notice and shall not be held responsible for any subsequent claims in relation to the content.