DSG Low Voltage Alternators

INSTALLATION, SERVICE AND MAINTENANCE MANUAL

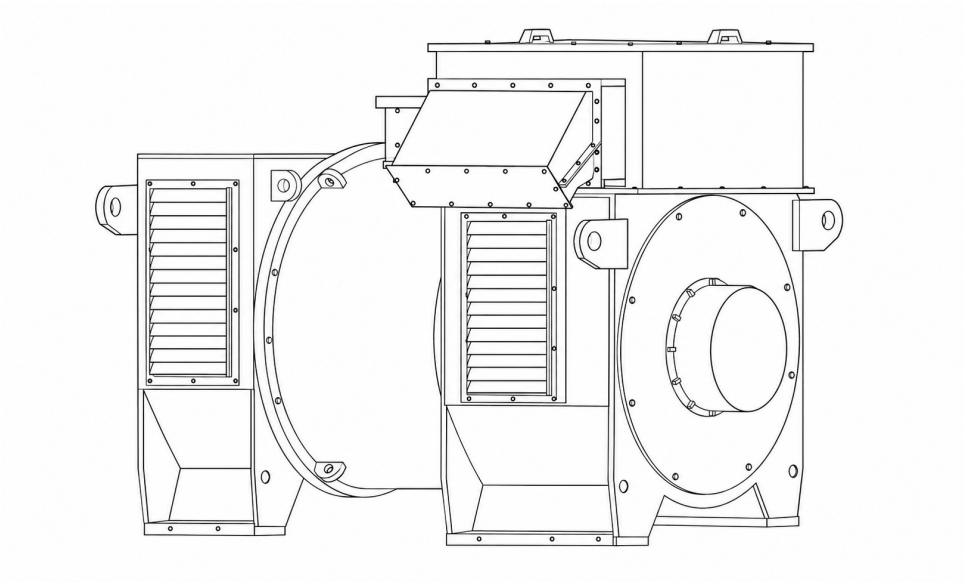

English
Original Instructions

7-2026 A081D089 (Issue 1)

Table of Contents

1. FOREWORD 1
2. SAFETY PRECAUTIONS 3
3. SAFETY DIRECTIVES AND STANDARDS 13
4. INTRODUCTION 23
5. TRANSPORTATION, STORAGE AND CORROSION PROTECTION 25
6. APPLICATION OF THE ALTERNATOR 35
7. GENERATOR SET COUPLING 43
8. MECHANICAL AND ELECTRICAL CONNECTIONS 55
9. COMMISSIONING AND STARTING 73
10. OPERATION 79
11. SERVICE AND MAINTENANCE 83
12. FAULT FINDING 123
13. SERVICE PARTS AND AFTER SALES SERVICE 139
14. END OF LIFE DISPOSAL 141

 Copyright © 2026 Cummins Inc

This page is intentionally blank.

1 Foreword

1.1 General

This document is an important guide to the intended use and operation of the product(s) detailed on the front cover. Read the information and procedures in this document. The information and procedures must be obeyed at all times. Failure to obey the information and procedures can be considered misuse and can lead to injury, loss or damage to personnel or equipment.

TABLE 1. COMPANY ADDRESSES

Company and European Authorized Representative Addresses	
Cummins Generator Technologies Fountain Court Lynch Wood Peterborough PE2 6FZ United Kingdom	Cummins Generator Technologies Bvd. Decebal 116A Craiova Dolj 200746 Romania

1.2 Legal

The alternator is the intellectual property of Cummins Generator Technologies Ltd (also referred to as 'CGT' or 'the manufacturer' or by the brand names 'STAMFORD®' or 'AvK®' within this manual).

STAMFORD®, AvK® and STAMFORD VITA™, MX321™ and MX322™ are registered trademarks of Cummins Generator Technologies Ltd. All rights to the alternator, the principle of the machine, the related drawings etc. lie with Cummins Generator Technologies Ltd and are subject to copyright law. Copying is only permitted with prior written approval. Copyright Cummins Generator Technologies. All rights reserved. Cummins and the Cummins logo are registered trademarks of Cummins Inc.

1.3 The Manual

This manual contains guidance and instructions for the installation, servicing and maintenance of the equipment specified on the manual front cover.

Before installing, operating, servicing or repairing the equipment, read this manual. Make sure that all personnel who work on the equipment have access to the manual and all related documentation supplied with it. Misuse, failure to obey the instructions or use of non-approved parts, may invalidate the product warranty and lead to loss injury or damage.

This manual is an essential part of the equipment. Make sure that the manual is available to all applicable personnel throughout the life of the equipment.

The manual is written for skilled electrical and mechanical technicians and engineers, who have prior knowledge and experience of equipment of this type. If in doubt, contact your local CGT subsidiary.

NOTICE
Information in this manual was correct when published. It may be superseded due to our policy of continuous improvement. Visit www.stamford-avk.com for latest documentation.

This page is intentionally blank.

2 Safety Precautions

2.1 Safety Information and Notices used in this Manual

Danger, Warning and Caution panels used in this manual describe the sources of hazards, their consequences and how to avoid injury. Notice panels emphasize important or critical instructions.

⚠ DANGER
Danger indicates a hazardous situation which, if not avoided, WILL result in death or serious injury.

⚠ WARNING
Warning indicates a hazardous situation which, if not avoided, COULD result in death or serious injury.

⚠ CAUTION
Caution indicates a hazardous situation which, if not avoided, COULD result in minor or moderate injury.

NOTICE
Notice refers to a method or practice which can result in product damage, or to draw attention to additional information or explanations.

2.2 General Guidance

- These safety precautions are for general guidance. The information is intended to supplement your own safety procedures and applicable rules, laws and regulations.

2.3 Training and Skill Requirements for Personnel

Operation, installation, service and maintenance tasks and/or procedures can only be done by personnel, who:

- Have completed related, applicable and approved training.
- Know the equipment, understand the task(s) and procedure(s) and know the related hazards / risks.
- Know and obey site / location specific emergency procedures and applicable laws and regulations.

2.4 Risk Assessment

- The installer / operator / service / maintenance company must do a risk assessment to establish all related hazards and risks.
- During operation, access to the alternator must be restricted to personnel who are trained and who know all relevant hazards and risks. Refer to: **Section 2.3 on page 3**.

 Copyright © 2026 Cummins Inc

2.5 Personal Protective Equipment (PPE)

Personnel who install, operate, service or maintain the alternator must:

- Have access to the minimum recommended protective equipment (refer to the figure below). The protective equipment must be approved for the task or procedure.
- Know how to correctly use protective equipment, refer to: **Section 2.3 on page 3**
- Use protective equipment as directed by the risk assessment, refer to: **Section 2.4 on page 3**.

FIGURE 1. MINIMUM RECOMMENDED PERSONAL PROTECTIVE EQUIPMENT (PPE)

2.6 Tools and Equipment

All personnel must know how to use tools and equipment safely, refer to: **Section 2.3 on page 3**.

All tools and equipment used, must be:

- Suitable for the task and procedure.
- Electrically insulated (not below the alternator output voltage), refer to: **Section 2.4 on page 3**.
- In a serviceable condition for safe use.
- Included within the risk assessment, refer to: **Section 2.4 on page 3** .

2.7 Safety Information Signs

Safety information signs are provided on the equipment to indicate hazards and emphasize instructions. Before operating the equipment:

- Personnel must know and understand alternator safety information signs and the associated hazards / risks.

FIGURE 2. EXAMPLE SAFETY INFORMATION SIGNS

Safety information signs vary depending on alternator specification.

2.8 Alternator Danger Notices

⚠ DANGER

Live Electrical Conductors

Live electrical conductors can cause serious injury or death by electric shock and burns. To prevent injury and before working on live conductors:

- ***Shut down and isolate the alternator from all energy sources.***
- ***Remove or isolate stored energy.***
- ***Test isolated parts for electrical isolation using a suitable voltage tester.***
- ***Use lock out/tag out safety procedures.***

⚠ DANGER

Testing Live Electrical Conductors

Live electrical conductors can cause serious injury or death by electric shock and burns. To prevent injury and before testing on or near live electrical conductors:

- ***Take applicable precautions to prevent contact with live conductors, refer to: Safety Precautions Chapter.***
- ***Test on or near live conductors, only if absolutely necessary.***
- ***Only trained personnel may test on or near live electrical conductors.***
- ***Do not test on or near live electrical conductors alone: Another competent person must be present, trained to isolate energy sources and take action in an emergency.***

⚠ DANGER

Rotating Mechanical Parts

Rotating mechanical parts can cause serious injury or death by crushing, severing or trapping. To prevent injury:

- ***Before operating the alternator: The rotating coupling between the alternator and prime mover must be covered by a guard or cover.***
- ***Before attempting service or maintenance tasks or removing covers from rotating parts: Shut down and isolate the generator set from all energy sources, isolate stored energy and use lock out/tag out safety procedures.***

⚠ DANGER

Testing on Rotating Mechanical Parts

Rotating mechanical parts can cause serious injury or death by crushing, severing and trapping. To prevent injury and before removing safety covers for testing:

- ***Take applicable precautions to prevent contact with uncovered rotating mechanical parts, refer to Safety Precautions Chapter.***
- ***Test on or near uncovered rotating mechanical parts, only if absolutely necessary.***
- ***Do not test on or near uncovered rotating mechanical parts alone: Additional personnel must be present, who know how to isolate energy sources and take action in an emergency.***

 Copyright © 2026 Cummins Inc

⚠ DANGER

Falling Mechanical Parts

Falling mechanical parts can cause serious injury or death by impact, crushing, severing or trapping. To prevent injury or death and before lifting:

- ***Check the capacity, condition and attachment of lifting equipment.***
- ***Check the capacity, condition and attachment of accessories for lifting.***
- ***Check the capacity, condition and attachment of lifting point(s) on the load.***
- ***Check the mass, integrity and stability of the load.***
- ***If available: Install drive end and non-drive end transit fittings to prevent movement and damage to bearings.***
- ***Keep the alternator horizontal when lifting.***
- ***Do not use alternator lifting points for lifting a complete generator set.***
- ***Do not use cooler lifting points for lifting the alternator or a complete generator set.***
- ***Do not remove the lifting label attached to one of the lifting points.***

2.9 Alternator Warning Notices

⚠ WARNING

Enclosures

Alternators may be installed within an enclosure for environmental protection, noise reduction or transportation reasons. Before entering the enclosure to prevent injury or death, personnel must:

- ***Know the related hazards / risks.***
- ***Have a safe access route in to and out of the enclosure, have sufficient ventilation and obey the alternator hazard zones.***
- ***Wear the appropriate protective equipment.***

Additionally when working with Medium or High Voltage alternators:

- ***Enter the enclosure when the alternator is operating, only if absolutely necessary.***
- ***To minimize risks to personnel use remote diagnostic, monitoring and measuring systems.***

⚠ WARNING

Terminal Box

Do not modify the terminal box panels or terminal box internal components. Modification(s) can lead to short-circuits or arc-flash events and cause injury or death by electric shock or burns. To prevent injury:

- ***Refer to: Arc-Flash warning in the Safety Precaution Chapter.***
- ***Contact STAMFORD | AvK™ customer services (www.stamford-avk.com) for guidance before making modifications to the terminal box panels or internal components.***

⚠ WARNING

Arc-flash

An arc-flash event within the terminal box, on the alternator windings or at the cables exiting the terminal box can cause serious injury or death by: Noise, burns, impact from flying/molten debris and/or hot gases. To prevent injury or death from arc-flash:

- ***Do not approach the alternator during operation unless wearing appropriate personal protective equipment, refer to: Personal Protective Equipment Paragraph.***
- ***Personnel working close an operating alternator must be trained in arc-flash hazard awareness, refer to Training Paragraph.***

An arc-flash is a phenomenon where a flashover of electric current leaves its intended path and travels through the air from one conductor to another, or to ground. Arc-flash can be caused by many things, such as: material failure, corrosion, or incorrect installation.

It is the responsibility of the installer/operating company to do a risk assessment of arc-flash hazard as part of the complete installation, including connection to other energy sources.

Arc-flash hazards can include: Intense noise, hot and rapidly expanding gases, expanding pressure wave, flying debris (including molten copper) and exposure to intense UV light.

When the alternator is connected to other energy sources, the arc-flash can exceed an arc-flash produced by an individual alternator. These additional energy sources can be electrical loads that store energy (e.g. Transformers, capacitors etc.), alternators in parallel or coupled to a mains network.

While arc-flash in an alternator is rare, it is important that the installer/operating company takes applicable measures to ensure the safety of personnel. In accordance with local electrical safe working practices, personnel working around the running alternator must be trained in and aware of arc-flash hazards. Personal protective equipment must be worn when working within the vicinity of the alternator, refer to: Safety Precautions Chapter **Section 2.5 on page 4**.

Medium Voltage and High Voltage Alternators

Medium voltage and high voltage alternators can be fitted with additional warning and information stickers. Pressure relief vent(s) can be installed in the terminal box. The pressure relief vent(s) can vary from the one shown in the figure below).

If installed, make sure the pressure relief vent(s) are secure and serviceable. Do not remove, obstruct or apply a load to the pressure relief vent(s).

FIGURE 3. ARC-FLASH IMAGES

 Copyright © 2026 Cummins Inc

⚠ WARNING

Condensed Water

Operating an alternator with condensed water in the windings can cause serious injury by electric shock, burns or exposure to flying debris and particles. To prevent injury and before operating the alternator:

- ***Use anti-condensation heaters (if fitted) to prevent condensation accumulating.***
- ***Check for condensed water.***
- ***If condensed water is present, drain/remove the water, dry and inspect the alternator, refer to: Maintenance and Servicing Chapter.***

⚠ WARNING

Coupling an Alternator

Moving mechanical parts during coupling can cause serious injury by crushing, severing or trapping. When coupling the alternator to a prime-mover or when installing large components, to prevent injury:

- ***Personnel must keep limbs and body parts away from coupling surfaces during coupling and/or installing operations.***

⚠ WARNING

Hazardous Operating Environments (Explosive Atmospheres)

The use of the alternators in an explosive atmosphere can cause serious injury or death by burns and / or flying debris, particles and fumes. To prevent injury or death:

- ***Do not install or operate the alternator where the surrounding atmosphere is potentially explosive.***

⚠ WARNING

Hot Surfaces and Fire

Contact with hot surfaces can cause serious injury and death by burns. A risk of fire exists where hot surfaces are contacted by combustible items. To prevent injury, death or risk of fire:

- ***Avoid contact with hot surfaces.***
- ***Always wear the appropriate personal protection equipment, refer to: Safety Precaution Chapter.***
- ***Make sure combustible materials or flammable substances are not stored close to or contact the anti-condensation heater (if fitted).***
- ***Make sure combustible materials or flammable substances are not stored close to the alternator or prime mover, including the ventilation and exhaust system(s) where applicable.***

⚠ WARNING

Noise

Noise from a running alternator can cause serious and permanent hearing damage. To prevent injury:

- ***Always wear appropriate personal protection equipment. Refer to Personal Protective Equipment paragraph.***

⚠ WARNING

Incorrect Electrical Installation and System Protection

Incorrect electrical installation and / or system protection can cause serious injury or death by electric shock and burns. To prevent injury or death and before starting work, personnel:

- ***Have completed related, applicable and approved training.***
- ***Know the equipment, understand the task(s) and procedure(s).***
- ***Know related hazards / risks.***
- ***Know and obey site / location specific emergency procedures and applicable laws and regulations.***

⚠ WARNING

Live Electrical Conductors

Live electrical conductors at the winding terminals can cause serious injury or death by electric shock or burns. After an insulation resistance test, to prevent injury or death:

- ***Discharge the windings immediately after the test has concluded by shorting to a suitable earth. The windings must discharge for the greater of:***
  1. ***A length of time equal to the duration of the test.***
     or
  2. ***5 minutes.***

⚠ WARNING

Grounding

Incorrectly grounded alternators can cause serious injury or death or serious equipment damage by electric shock or electrical malfunction. To avoid equipment damage, injury or death:

- ***The alternator must be permanently grounded, unless the application or applicable laws and regulations do not permit alternator grounding.***

⚠ WARNING

Reconnected Energy Source

Accidental reconnection of energy sources during service and maintenance work can cause serious injury or death by electric shock, burns, crushing, severing or trapping. To prevent injury and before starting any service and maintenance work:

- ***Isolate the alternator from energy sources.***
- ***Prevent alternator use with lock out/tag out safety procedures.***
- ***Do not defeat or bypass the lock out/tag out safety procedures.***

⚠ WARNING

Strong Magnetic Field

The strong magnetic field from a Permanent Magnet Generator (PMG) or Excitation Boost System (EBS), can cause serious injury or death by interference with implanted medical devices. To prevent injury or death:

- ***Do not work near a Permanent Magnet Generator (PMG) or Excitation Boost System (EBS) if you have an implanted medical device.***

 Copyright © 2026 Cummins Inc

⚠ WARNING

Incorrect or Improper Use

Incorrect or improper use of the alternator may result in equipment damage, serious injury or death. To prevent equipment damage, injury or death:

- ***Always select the correct specification alternator for the intended use and application.***
- ***Make sure the alternator and prime mover are compatible and suitable for the intended application.***
- ***Always install the alternator in accordance with the original manual(s) and technical drawing(s) supplied with the alternator.***
- ***Obey locally applicable rules and regulations.***
- ***Make sure the alternator is operated in accordance with the manual(s) and within the limits of the alternator rating plate.***
- ***Do not use a damaged or defective alternator.***

If a defect(s) is discovered:

- ***Shut down and isolate the alternator from all energy sources.***
- ***Remove or isolate stored energy.***
- ***Use lock out / tag out safety procedures.***
- ***Prevent further use of the alternator until it is repaired and returned to a serviceable condition.***

⚠ WARNING

Removing Safety Covers

A hazard exists when alternator safety covers are removed. Ejected debris and particles can cause serious injury or death by impact, severing or puncturing. Exposure to mechanically driven release of debris and particles exists in all directions (horizontally and vertically) where covers are removed. To prevent injury or death:

- ***Fit the safety labels at the locations shown on the back of the label sheet supplied.***
- ***Observe the safety labels.***
- ***Refer to the service manual before removing covers.***

FIGURE 4. SAFETY LABEL

⚠ WARNING

Exposure to Ejected Debris and Particles

Ejected debris and particles can cause serious injury or death by impact, severing or puncturing. Exposure to mechanically driven release of debris and particles exists in all directions (horizontally and vertically) in the areas surrounding the alternator air outlet(s), air inlets(s) and the open shaft end (also commonly known as the Drive End (DE)). To prevent injury or death:

- ***Keep away from the air inlet(s) and air outlet(s) when the alternator is operating.***
- ***Do not position operator controls near the air inlet(s) or air outlet(s).***
- ***Do not cause overheating by running the alternator outside rating plate parameters.***
- ***Do not overload the alternator.***
- ***Do not operate an alternator displaying excessive vibration.***
- ***Do not synchronize parallel alternators outside the specified parameters.***

⚠ WARNING

Exposure to Particles and Fumes from an Alternator.

Particles and fumes can be released in all directions (horizontally and vertically) from where alternator ventilation is installed. To avoid injury:

- ***Avoid the areas around ventilation openings, air intake(s) and air outlet(s) when the alternator is operating.***
- ***Use the correct personal protective equipment when working around an alternator.***

⚠ WARNING

Exposure to Particles and Fumes from Alternator Terminal Boxes.

Particles and fumes can be released in all directions (horizontally and vertically) from where terminal box pressure release flaps are installed. Terminal box pressure release flap(s) can be located at different positions and orientations. To avoid injury:

- ***Personnel must keep away from terminal box pressure release flap(s) during alternator operation.***

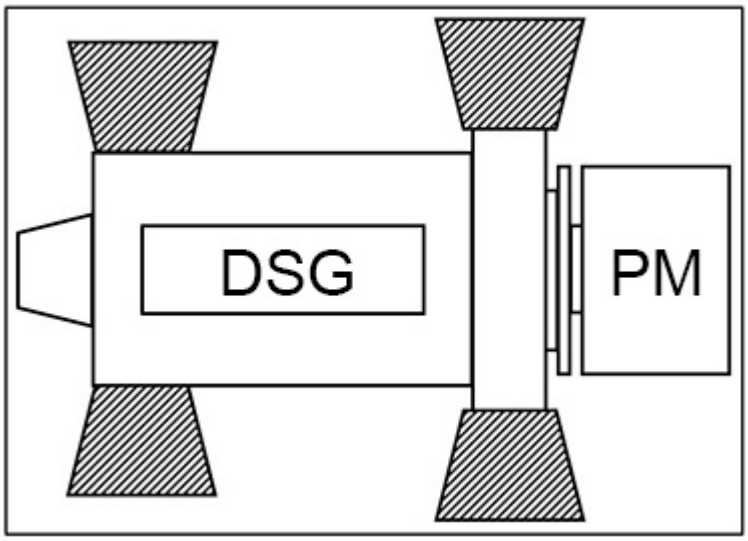

FIGURE 5. DSG ALTERNATOR HAZARD ZONES

PM = Prime Mover / Engine / Drive System

 Copyright © 2026 Cummins Inc

2.10 Alternator Caution Notices

⚠ CAUTION

Hazardous Substances

Hazardous substances can cause minor or moderate injury. Prolonged or repetitive exposure to hazardous substances can cause serious medical conditions. To prevent injury:

- ***Always read and obey the instructions provided by the product manufacturer.***
- ***Use, handle and store substances as specified by the product manufacturer.***
- ***Always wear appropriate personal protective equipment, refer to Safety Precautions Chapter.***

⚠ CAUTION

Missing Walkways and Handrails

Walkways and handrails temporarily removed for service and maintenance access can cause minor or moderate injury by slips, trips and falls. To prevent injury and before starting work:

- ***Assess the hazards and risks, take applicable precautions for safe working, place warnings and prevent access by unauthorized persons.***

⚠ CAUTION

Dust & Airborne Particles/Fumes

Dust and other airborne particles and fumes can cause minor or moderate injury by irritating the lungs and eyes. Prolonged or repetitive exposure can cause serious medical conditions. To prevent injury:

- ***Use mechanical vacuum extraction to remove dust and airborne particles or fumes.***
- ***Ventilate the area fully.***
- ***Always wear the appropriate personal protective equipment. Refer to Safety Precautions Chapter.***

3 Safety Directives and Standards

3.1 General

STAMFORD® and AvK® alternators meet applicable national and international directives and standards relevant to alternators. The alternator must be operated within the limits specified in the relevant standards and within the parameters on the alternator rating plate. The alternator must comply with the regulatory requirements of the area/territory it is installed and used within.

Marine alternators meet the requirements of all the major marine classification societies.

This chapter includes EU/UK declaration template examples, where and if applicable.

Where necessary, STAMFORD® and AvK® alternators are supplied with a declaration certificate that displays the product description and unique serial number.

3.2 Example: Declarations of Conformity and Incorporation

CGT issue a Declaration of Conformity under the Low Voltage Directive 2014/35/EU. This Declaration is used for all complete products <1000 VAC that do not require the customer to provide any additional components to ensure the product meets the health and safety requirements of the Directive.

CGT issue a Declaration of Incorporation under the Machinery Directive 2006/42/EC. This Declaration is used for all products <1000 VAC that are **not** complete and will require the customer to provide additional components to ensure the product meets the health and safety requirements of the Directive.

Where necessary alternators are supplied with a certificate that displays the product description and unique serial number.

Below are examples of both types of EU and UK 'Declarations of Conformity' and 'Declarations of Incorporation' that STAMFORD® and AvK® alternators can be supplied with.

NOTICE
If the certificate is lost, missing or damaged, contact STAMFORD® or AvK® customer services www.stamford-avk.com.

 Copyright © 2026 Cummins Inc

EU DECLARATION OF CONFORMITY

Generator Technologies

This synchronous low-voltage (<1000VAC) A.C. generator is designed for incorporation into an electricity generating-set and fulfils all the relevant provisions of the following EU Directive(s) when installed in accordance with the installation instructions contained in the product documentation:

2014/35/EU	Low Voltage Directive
2014/30/EU	The Electromagnetic Compatibility (EMC) Directive
2011/65/EU	Restriction on Hazardous Substances in Electrical and Electronic Equipment (RoHS) Directive
2015/863	Delegated Directive amending Annex II of 2011/65/EU
2019/178	Delegated Directive amending Annex II of 2011/65/EU
2019/1845	Delegated Directive amending Annex II of 2011/65/EU

and that the standards and/or technical specifications referenced below have been applied:

EN IEC 61000-6-2:2019	Electromagnetic compatibility (EMC). Generic standards – Part 6-2: Immunity for industrial environments
EN IEC 61000-6-4:2019	Electromagnetic compatibility (EMC). Generic standards – Part 6-4: Emission standard for industrial environments
EN ISO 12100:2010	Safety of machinery – General principles for design – Risk assessment and risk reduction
IEC 60034-1:2017	Rotating electrical machines - Part 1: Rating and performance
ISO 8528-3:2020	Reciprocating internal combustion engine driven alternating current generating sets - Part 3: Alternating current generators for generating sets
BS 5000-3:2006	Rotating electrical machines of particular types or for particular applications - Part 3: Generators to be driven by reciprocating internal combustion engines - Requirements for resistance to vibration
EN IEC 63000:2018	Technical documentation for the assessment of electrical and electronic products with respect to the restriction of hazardous substances

This declaration has been issued under the sole responsibility of the manufacturer. The object of this Declaration is in conformity with the relevant Union harmonization Legislation.

The name and address of authorised representative, authorised to compile the relevant technical documentation, is the Company Secretary, Cummins Generator Technologies Romania, B-dul Decebal Nr. 116A 200746 Craiova Dolj, Romania.

Signed:	Name, Title and Address:
A McQueen Date: 4th August 2021	Alastair McQueen Global Technical Director Cummins Generator Technologies Romania B-dul Decebal Nr. 116A 200746, Craiova Dolj, ROMANIA

Description: Serial Number:

Registered in England under Registration No. 441273.
Cummins Generator Technologies Ltd. Registered Office: Fountain Court, Lynch Wood, Peterborough, PE2 6FZ UK

450-16383-K

FIGURE 6. EXAMPLE EU DECLARATION OF CONFORMITY - SHEET 1

EU DECLARATION OF CONFORMITY

Generator Technologies

The A.C. Generator utilizes hazardous material exemptions as detailed in Annex III of EU Directive 2011/65/EU

Products carrying the following descriptions are considered to be out of scope of RoHS Directive 2011/65/EU, intended to be installed in Large Scale Fixed Installations and for installation into a pre-defined and dedicated location, installed and de-installed by professionals:

LVI80*
LVSI80*
S9L1D*
DSG 99*
DSG 114*
DSG 125*
DSG 144*

Where "*" represents any combination of letters and characters completing the specific description of the product.

450-1693-K

Registered in England under Registration No. 441273.
Cummins Generator Technologies Ltd. Registered Office: Fountain Court, Lynch Wood, Peterborough, PE2 6FZ UK

FIGURE 7. EXAMPLE EU DECLARATION OF CONFORMITY - SHEET 2

 Copyright © 2026 Cummins Inc

UK DECLARATION OF CONFORMITY

Generator Technologies

This synchronous low-voltage (<1000VAC) A.C. generator is designed for incorporation into an electricity generating-set and fulfils all the relevant provisions of the following UK Statutory Instrument(s) when installed in accordance with the installation instructions contained in the product documentation:

S.I. 2016/1101	The Electrical Equipment (Safety) Regulations
S.I. 2016/1091	The Electromagnetic Compatibility Regulations
S.I. 2012/3032	The Restriction of the Use of Certain Hazardous Substances in Electrical and Electronic Equipment Regulations
S.I. 2019/492	The Restriction of the Use of Certain Hazardous Substances in Electrical and Electronic Equipment (Amendment) Regulations
S.I. 2008/1597	The Supply of Machinery (Safety) Regulations

and that the standards and/or technical specifications referenced below have been applied:

BS EN IEC 61000-6-2:2019	Electromagnetic compatibility (EMC). Generic standards – Part 6-2: Immunity standard for industrial environments
BS EN IEC 61000-6-4:2019	Electromagnetic compatibility (EMC). Generic standards – Part 6-4: Emission standard for industrial environments
BS EN ISO 12100:2010	Safety of machinery – General principles for design – Risk assessment and risk reduction
IEC 60034-1:2017	Rotating electrical machines: Rating and performance
BS ISO 8528-3:2020	Reciprocating internal combustion engine driven alternating current generating sets - Part 3: Alternating current generators for generating sets
BS EN IEC 63000:2018	Technical documentation for the assessment of electrical and electronic products with respect to the restriction of hazardous substances

This declaration has been issued under the sole responsibility of the manufacturer. The object of this Declaration is in conformity with the relevant UK Legislation.

The name and address of authorised representative, authorised to compile the relevant technical documentation, is the Company Secretary, Cummins Generator Technologies, Fountain Court, Lynch Wood, Peterborough, UK. PE2 6FZ

Signed:	Name, Title and Address:
A McQueen Date: 4th August 2021	Alastair McQueen Global Technical Director Cummins Generator Technologies Fountain Court, Lynch Wood Peterborough, UK PE2 6FZ

Description: Serial Number:

Registered in England under Registration No. 441273.
Cummins Generator Technologies Ltd. Registered Office: Fountain Court, Lynch Wood, Peterborough, PE2 6FZ UK

400-16383-K

FIGURE 8. EXAMPLE UK DECLARATION OF CONFORMITY - SHEET 1

UK DECLARATION OF CONFORMITY

Generator Technologies

The A.C. Generator utilizes hazardous material exemptions as detailed in Annex III of S.I. 2012/2032

Products carrying the following descriptions are considered to be out of scope of S.I. 2012/2032, intended to be installed in Large Scale Fixed Installations and for installation into a pre-defined and dedicated location, installed and de-installed by professionals:
LVI80*
LVSI80*
S9L1D*
DSG 99*
DSG 114*
DSG 125*
DSG 144*
Where "*" represents any combination of letters and characters completing the specific description of the product.

450-16383-K

Registered in England under Registration No. 441273.
Cummins Generator Technologies Ltd. Registered Office: Fountain Court, Lynch Wood, Peterborough, PE2 6FZ UK

FIGURE 9. EXAMPLE UK DECLARATION OF CONFORMITY - SHEET 2

 Copyright © 2026 Cummins Inc

2006/42/EC MACHINERY DIRECTIVE DECLARATION OF INCORPORATION OF PARTLY COMPLETED MACHINERY

Cummins Generator Technologies

Function: Synchronous low-voltage (<1000VAC) A.C. generator designed for incorporation into an electricity generating-set.

The partly completed machinery supplied with this declaration:

- Is designed and constructed solely as a non-functional component to be incorporated into a machine requiring completion.
- Is designed to comply with the provisions of the following EU Directive(s) so far as their level of build will allow:

2014/35/EU	Low Voltage Directive
2014/30/EU	The Electromagnetic Compatibility (EMC) Directive
2011/65/EU	Restriction on Hazardous Substances in Electrical and Electronic Equipment (RoHS) Directive
2015/863	Delegated Directive amending Annex II of 2011/65/EU
2019/178	Delegated Directive amending Annex II of 2011/65/EU
2019/1845	Delegated Directive amending Annex II of 2011/65/EU

- Must not be put into service within the European Community ("EC") until the final machinery into which it is to be incorporated has been declared in conformity with the Machinery Directive and all other applicable EC Directives.
- Is designed and constructed to comply with the essential health and safety requirements of the Machinery Directive 2006/42/EC listed on sheet 2 of this Declaration.

The relevant technical documentation is compiled in accordance with the provisions of part B of Annex VII of the Machinery Directive. All relevant information about the partly completed machinery will be provided, in writing, on a reasoned request by the appropriate national authority to its authorised representative. The name and address of authorised representative, authorised to compile the relevant technical documentation, is the Company Secretary, Cummins Generator Technologies Romania, B-dul Decebal Nr. 116A 200746 Craiova Dolj, Romania.

The undersigned representing the manufacturer:

Signed:	Name, Title and Address:
A McQueen Date: 4th August 2021	Alastair McQueen Global Technical Director Cummins Generator Technologies Romania B-dul Decebal Nr. 116A 200746 Craiova Dolj, ROMANIA

Description: Serial Number

450-16358-L

Sheet | 1

Registered in England under Registration No. 441273.
Cummins Generator Technologies Ltd. Registered Office: Fountain Court, Lynch Wood, Peterborough, PE2 6FZ UK

FIGURE 10. EXAMPLE EU DECLARATION OF INCORPORATION - SHEET 1

2006/42/EC MACHINERY DIRECTIVE DECLARATION OF INCORPORATION OF PARTLY COMPLETED MACHINERY

Cummins Generator Technologies

ESSENTIAL HEALTH AND SAFETY REQUIREMENTS RELATING TO THE DESIGN AND CONSTRUCTION OF PARTLY COMPLETED MACHINERY

1.1 General Remarks
- 1.1.2 : Principles of safety integration
- 1.1.3 : Materials and products
- 1.1.5 : Design of machinery to facilitate its handling

1.3 Protection Against Mechanical Hazards
- 1.3.1 : Risk of loss of stability
- 1.3.2 : Risk of break-up during operation
- 1.3.3 : Risks due to falling or ejected objects
- 1.3.4 : Risks due to surfaces, edges or angles
- 1.3.7 : Risks related to moving parts
- 1.3.8.1 : Moving transmission parts

1.4 Guarding *
- 1.4.1 : Guards – General requirements *
- 1.4.2.1 : Fixed guards *

1.5 Other Hazards
- 1.5.2 : Static electricity
- 1.5.3 : Energy supply other than electric
- 1.5.4 : Errors of fitting
- 1.5.6 : Fire
- 1.5.13 : Emissions of hazardous materials and substances

1.7 Information
- 1.7.1 : Information and warnings on the machinery
- 1.7.4 : Instructions

LEGEND

1. Essential Health and Safety Requirements not shown are not considered applicable for this Partly Completed Machinery or must be fulfilled by the assembler of the Machinery.
2. Essential Health and Safety Requirements shown are considered applicable for this Partly Completed Machinery and have been fulfilled by the manufacturer to the extent possible, subject to the build requirements of the Machinery assembler, the information contained in the assembly instructions and Cummins bulletins.
3. * Customers may request Partly Completed Machinery without some or all guarding attached. In these cases section 1.4 Guarding does not apply and the Essential Health and Safety Requirements for guarding must be fulfilled by the assembler of the Machinery.

The A.C. Generator utilizes hazardous material exemptions as detailed in Annex III of EU Directive 2011/65/EU

Products carrying the following descriptions are considered to be out of scope of RoHS Directive 2011/65/EU, intended to be installed in Large Scale Fixed Installations and for installation into a pre-defined and dedicated location, installed and de-installed by professionals:

LVI80*
LVSI80*
S9L1D*
DSG 99*
DSG 114*
DSG 125*
DSG 144*

Where "*" represents any combination of letters and characters completing the specific description of the product

450-16308-L

Sheet | 2

Registered in England under Registration No. 441273.
Cummins Generator Technologies Ltd. Registered Office: Fountain Court, Lynch Wood, Peterborough, PE2 6FZ UK

FIGURE 11. EXAMPLE EU DECLARATION OF INCORPORATION - SHEET 2

 Copyright © 2026 Cummins Inc

SUPPLY OF MACHINERY (SAFETY) REGULATIONS 2008
DECLARATION OF INCORPORATION OF PARTLY COMPLETED MACHINERY

Cummins Generator Technologies

Function: Synchronous low-voltage (<1000VAC) A.C. generator designed for incorporation into an electricity generating-set.

The partly completed machinery supplied with this declaration:

- Is designed and constructed solely as a non-functional component to be incorporated into a machine requiring completion.
- Is designed to comply with the provisions of the following UK Statutory Instrument(s) so far as their level of build will allow:

S.I. 2016/1101	The Electrical Equipment (Safety) Regulations
S.I. 2016/1091	The Electromagnetic Compatibility Regulations
S.I. 2012/3032	The Restriction of the Use of Certain Hazardous Substances in Electrical and Electronic Equipment Regulations
S.I. 2019/492	The Restriction of the Use of Certain Hazardous Substances in Electrical and Electronic Equipment (Amendment) Regulations
S.I. 2008/1597	The Supply of Machinery (Safety) Regulations

- Must not be put into service within the UK until the final machinery into which it is to be incorporated has been declared in conformity with the Supply of Machinery (Safety) Regulations 2008 and all other applicable UK Statutory Instruments.
- Is designed and constructed to comply with the essential health and safety requirements of the Supply of Machinery (Safety) Regulations 2008 listed on sheet 2 of this Declaration.

The relevant technical documentation is compiled in accordance with the provisions of part B of Annex VII of the Machinery Directive. All relevant information about the partly completed machinery will be provided, in writing, on a reasoned request by the appropriate national authority to its authorised representative. The name and address of authorised representative, authorised to compile the relevant technical documentation, is the Company Secretary, Cummins Generator Technologies, Fountain Court, Lynch Wood, Peterborough, UK. PE2 6FZ

The undersigned representing the manufacturer:

Signed:	Name, Title and Address:
A McQueen Date: 4th August 2021	Alastair McQueen Global Technical Director Cummins Generator Technologies Fountain Court, Lynch Wood Peterborough, UK PE2 6FZ

Description: Serial Number:

450-16389-L

Sheet | 3

Registered in England under Registration No. 441273.
Cummins Generator Technologies Ltd. Registered Office: Fountain Court, Lynch Wood, Peterborough, PE2 6FZ UK

FIGURE 12. EXAMPLE UK DECLARATION OF INCORPORATION - SHEET 1

SUPPLY OF MACHINERY (SAFETY) REGULATIONS 2008 DECLARATION OF INCORPORATION OF PARTLY COMPLETED MACHINERY

Cummins Generator Technologies

ESSENTIAL HEALTH AND SAFETY REQUIREMENTS RELATING TO THE DESIGN AND CONSTRUCTION OF PARTLY COMPLETED MACHINERY

General Remarks
- 1.1.2 : Principles of safety integration
- 1.1.3 : Materials and products
- 1.1.5 : Design of machinery to facilitate its handling

Protection Against Mechanical Hazards
- 1.3.1 : Risk of loss of stability
- 1.3.2 : Risk of break-up during operation
- 1.3.3 : Risks due to falling or ejected objects
- 1.3.4 : Risks due to surfaces, edges or angles
- 1.3.7 : Risks related to moving parts
- 1.3.8.1 : Moving transmission parts

Guarding *
- 1.4.1 : Guards – General requirements *
- 1.4.2.1 : Fixed guards *

Other Hazards
- 1.5.2 : Static electricity
- 1.5.3 : Energy supply other than electric
- 1.5.4 : Errors of fitting
- 1.5.6 : Fire
- 1.5.13 : Emissions of hazardous materials and substances

Information
- 1.7.1 : Information and warnings on the machinery
- 1.7.4 : Instructions

LEGEND

1 Essential Health and Safety Requirements not shown are not considered applicable for this Partly Completed Machinery or must be fulfilled by the assembler of the Machinery.

2 Essential Health and Safety Requirements shown are considered applicable for this Partly Completed Machinery and have been fulfilled by the manufacturer to the extent possible, subject to the build requirements of the Machinery assembler, the information contained in the assembly instructions and Cummins bulletins.

3 * Customers may request Partly Completed Machinery without some or all guarding attached. In these cases section 1.4 Guarding does not apply and the Essential Health and Safety Requirements for guarding must be fulfilled by the assembler of the Machinery.

The A.C. Generator utilizes hazardous material exemptions as detailed in Annex III of S.I. 2012/2032

Products carrying the following descriptions are considered to be out of scope of S.I. 2012/2032, intended to be installed in Large Scale Fixed Installations and for installation into a pre-defined and dedicated location, installed and de-installed by professionals:

LVI80*
LVSI80*
S9L1D*
DSG 99*
DSG 114*
DSG 125*
DSG 144*

Where "*" represents any combination of letters and characters completing the specific description of the product

450-16388-L

Sheet | 4

Registered in England under Registration No. 441273.
Cummins Generator Technologies Ltd. Registered Office: Fountain Court, Lynch Wood, Peterborough, PE2 6FZ UK

FIGURE 13. EXAMPLE UK DECLARATION OF INCORPORATION - SHEET 2

 Copyright © 2026 Cummins Inc

3.3 Additional Information for Electromagnetic Compatibility Compliance (EMC)

Where necessary STAMFORD® and AvK® alternators are designed to meet electromagnetic compatibility compliance emissions and immunity standards for industrial environments. Additional equipment may be required when the alternator is installed in residential, commercial, and light industrial environments.

The installation ‘earth/ground’ arrangements require the connection of the alternator frame to the site protective earth conductor using a minimum lead length.

NOTICE
Cummins Generator Technology is not liable for electromagnetic compatibility compliance if non-genuine STAMFORD® or AvK® brand parts are used for maintenance, servicing or repairs.

3.4 Additional Information for Canadian Standards Association (CSA)

To comply with Canadian Standards Association (CSA) regulations, all external wiring and components must be rated to at least the alternator rated voltage shown on the alternator rating plate.

4 Introduction

4.1 General Description

AvK DSG alternators are of brushless rotating field design, available in the following ranges :

- Low Voltage (LV) up to 1000 V, 50 Hz (1500 RPM - 4 pole; 1000 RPM – 6 pole; 750 RPM – 8 pole; 600 RPM – 10 pole) and 1000 V, 60 Hz (1800 RPM - 4 pole; 1200 RPM – 6 pole; 900 RPM – 8 pole; 720 RPM – 10 pole).

DSG alternators have an excitation system which uses various AVRs, powered by an Auxiliary Winding or Permanent Magnet Generator (PMG).

4.2 Serial Number Location

A unique serial number is shown on the alternator rating plate and stamped in to the alternator frame.

4.3 Rating Plate

A rating plate is permanently attached to the alternator and must not be removed. The rating plate provides information on manufacture, identification, electrical and mechanical aspects.

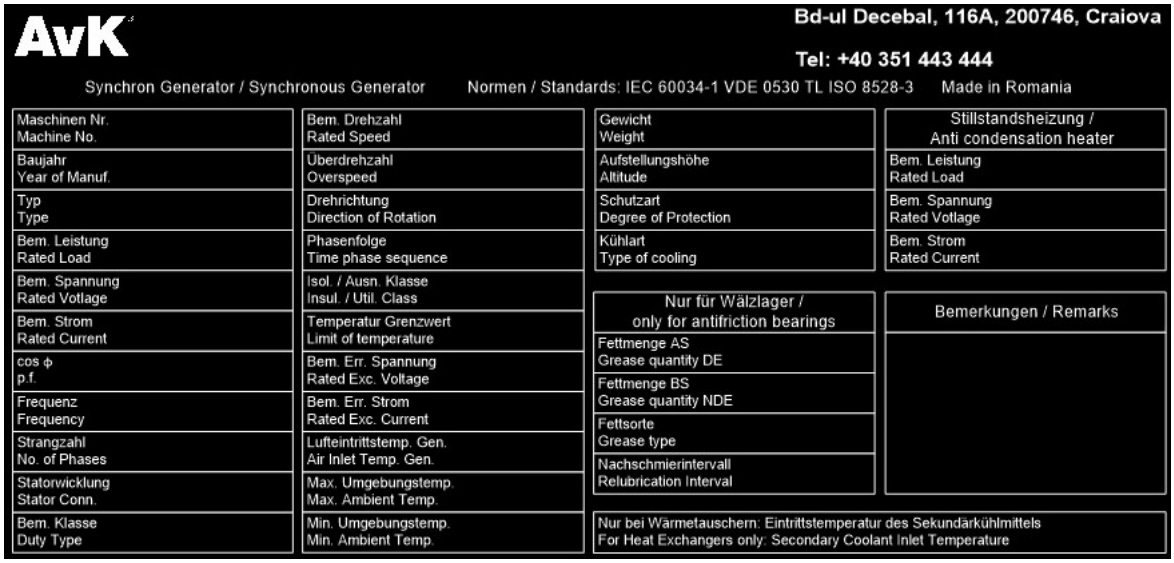

FIGURE 14. RATING PLATE

 Copyright © 2026 Cummins Inc

This page is intentionally blank.

5 Transportation, Storage and Corrosion Protection

5.1 Transportation and Packaging

5.1.1 General Transport Guidance

Alternators vary in shape, size, weight, and center of gravity. For product information, refer to the general arrangement drawing, lifting label and transport information supplied with the alternator.

Before loading a vehicle, transporting a load and/or unloading a vehicle:

- Obey applicable rules and regulations relating to transport operations at all times.
- Make sure a sufficient number of applicably configured restraints are used to lash down/secure an alternator to a vehicle.
- Do not position lashing down/securing restraints on or over sensitive components that can be damaged by the restraint.
- Do not position lashing down/securing restraints on paintwork or information/warning labeling. Protect these areas if restrains must be placed over them.
- Before transportation or storage, apply an anti-corrosion agent to exposed machined surfaces.
- Before transportation or storage, cover exposed connection points with a sufficient cover, cap or packaging material.
- Before transportation or storage, if necessary, protect bearings from vibration using anti-vibration pads. Do not transport unprotected alternators over an uneven surface.
- Alternators should be supplied on a transport frame if necessary.
- Bearings should be protected from damage by using a transportation lock (if available) when necessary. If a transport lock is supplied with the bearing/alternator it must be installed before transportation.
- Read and obey industry best practice guidance.
- Consult with a transport specialist for advice if necessary.

5.1.2 Transporting Alternators Fitted With Anti-Friction Bearings

Ball bearings and roller bearings are lubricated using a lubricant in the factory. The lubricant is stated on the rating plate.

The first filling of the bearings with lubricant is adequate until the first re-lubrication interval, provided the alternator is not stored.

5.1.3 Transporting Alternators Fitted With Sleeve Bearings

The sleeve bearings are drained after the alternator test run; they are therefore delivered wet with oil. All oil inlets and oil outlets as well as oil pipes are sealed. This method provides adequate protection against corrosion. Sleeve bearings must be filled with oil during commissioning before operating the alternator. The sleeve bearings must always be transported wet with oil but not filled with oil.

5.1.4 General Information for Air-Water Coolers

Before transportation:

- Air-water coolers are drained and the inlets and outlets on the cooler are sealed using protective caps.

 Copyright © 2026 Cummins Inc

5.1.5 Packaging

Packaging depends on the mode of transport (truck, ship, air freight).

The alternator is packed using environmentally-friendly materials (blocks of wood, wooden crates, plastic sheet) that comply with the IPPC regulations.

- For transport by ship, the alternator must be packed for a maritime environment to protect against splashes of salt water, moisture and vibration damage during loading, transport and unloading
- For long transport routes, on customer request the alternator will be sealed with air- and dust-tight plastic sheet with desiccant.

5.1.6 Lifting the Alternator

⚠ DANGER

Falling Mechanical Parts

Falling mechanical parts can cause serious injury or death by impact, crushing, severing or trapping. To prevent injury or death and before lifting:

- ***Check the capacity, condition and attachment of lifting equipment.***
- ***Check the capacity, condition and attachment of accessories for lifting.***
- ***Check the capacity, condition and attachment of lifting point(s) on the load.***
- ***Check the mass, integrity and stability of the load.***
- ***If available: Install drive end and non-drive end transit fittings to prevent movement and damage to bearings.***
- ***Keep the alternator horizontal when lifting.***
- ***Do not use alternator lifting points for lifting a complete generator set.***
- ***Do not use cooler lifting points for lifting the alternator or a complete generator set.***
- ***Do not remove the lifting label attached to one of the lifting points.***

Lifting diagram for:

- DSG125 and DSG144.

For additional transport information, refer to: The drawings and information supplied in the alternator information pack and/or the lifting label attached to the alternator.

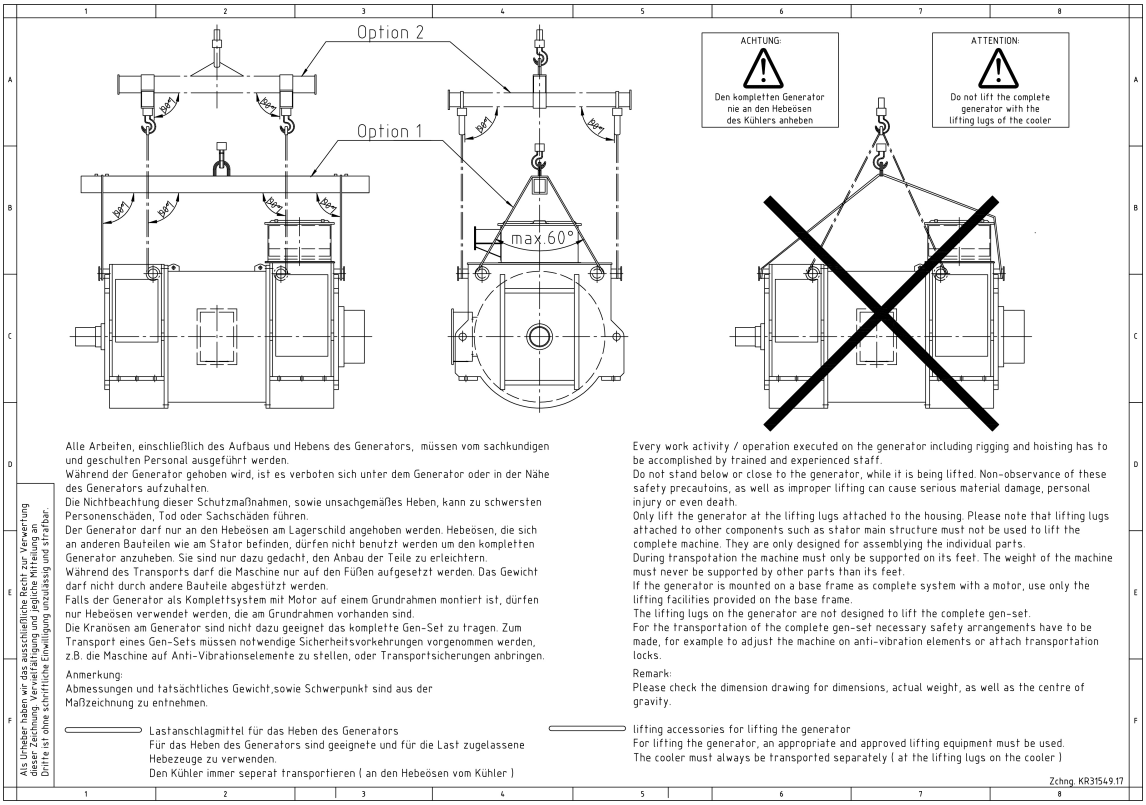

FIGURE 15. TRANSPORT INFORMATION

5.1.7 Lifting the Alternator

⚠ DANGER

Falling Mechanical Parts

Falling mechanical parts can cause serious injury or death by impact, crushing, severing or trapping. To prevent injury or death and before lifting:

- ***Check the capacity, condition and attachment of lifting equipment.***
- ***Check the capacity, condition and attachment of accessories for lifting.***
- ***Check the capacity, condition and attachment of lifting point(s) on the load.***
- ***Check the mass, integrity and stability of the load.***
- ***If available: Install drive end and non-drive end transit fittings to prevent movement and damage to bearings.***
- ***Keep the alternator horizontal when lifting.***
- ***Do not use alternator lifting points for lifting a complete generator set.***
- ***Do not use cooler lifting points for lifting the alternator or a complete generator set.***
- ***Do not remove the lifting label attached to one of the lifting points.***

Lifting diagram for:

- DSG All Variants.

For additional transport information, refer to: The lifting drawing supplied in the alternator information pack and/or the lifting label attached to the alternator.

 Copyright © 2026 Cummins Inc

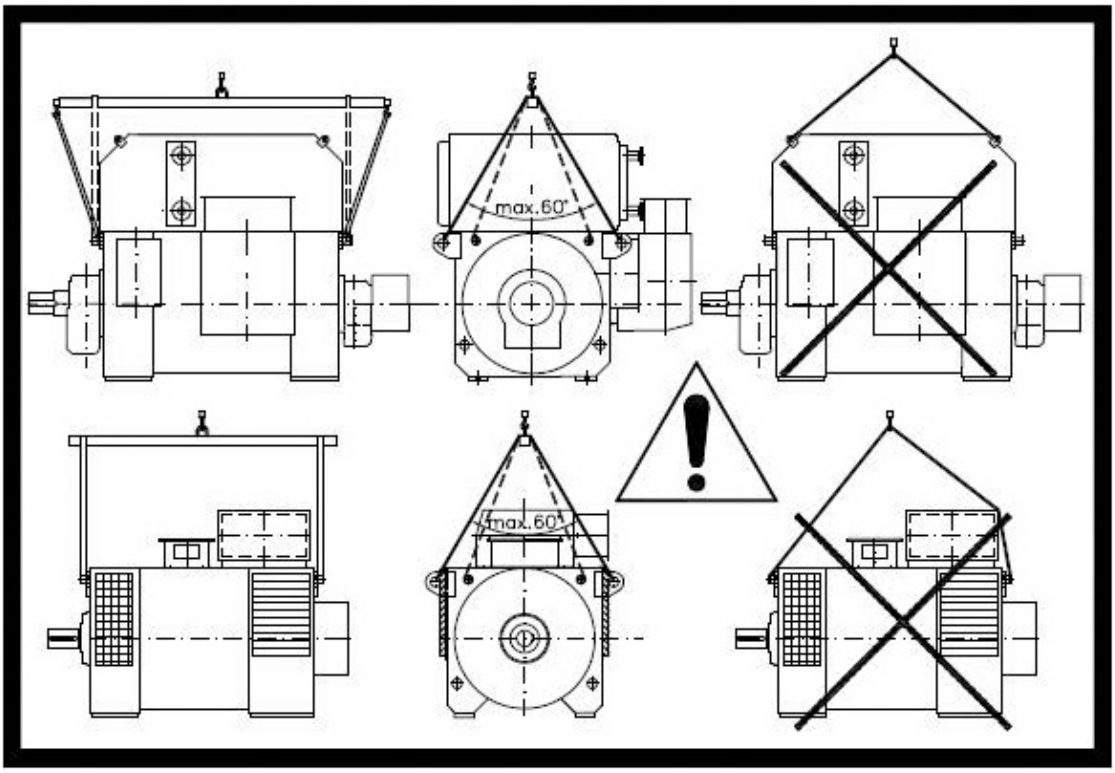

FIGURE 16. TRANSPORT INFORMATION - DSG

5.1.8 Unpacking Checks

Check that the items supplied correspond to the order specification and the delivery note. We refer to our terms and conditions of sale and supply.

5.1.9 Inspection on Arrival

Check the alternator and all supplied parts immediately it arrives. Check for evidence of improper handling. Any transport damage must be photographed and reported to the freight carrier and the supplier within seven days, so a claim can be made against the transport insurance.

If the alternator is not to be installed immediately do not leave it to stand without further protection. For further details see **Section 5.2 on page 29**.

5.1.10 Inspection on Unpacking

Place the alternator on a flat surface free of vibration. Ensure there is sufficient access to the alternator and associated components.

Remove the packaging and check that the alternator is not damaged. Compare the delivery with the delivery note enclosed to check that additional items are present. If damage is suspected or an item is missing, take photographs that clearly show the problem and contact the freight carrier and the supplier immediately.

Refer to **Section 14.2 on page 141** for the correct disposal and recycling of the packaging material.

5.2 Storage

⚠ WARNING

Condensed Water

Operating an alternator with condensed water in the windings can cause serious injury by electric shock, burns or exposure to flying debris and particles. To prevent injury and before operating the alternator:

- ***Use anti-condensation heaters (if fitted) to prevent condensation accumulating.***
- ***Check for condensed water.***
- ***If condensed water is present, drain/remove the water, dry and inspect the alternator, refer to: Maintenance and Servicing Chapter.***

⚠ WARNING

Hot Surfaces and Fire

Contact with hot surfaces can cause serious injury and death by burns. A risk of fire exists where hot surfaces are contacted by combustible items. To prevent injury, death or risk of fire:

- ***Avoid contact with hot surfaces.***
- ***Always wear the appropriate personal protection equipment, refer to: Safety Precaution Chapter.***
- ***Make sure combustible materials or flammable substances are not stored close to or contact the anti-condensation heater (if fitted).***
- ***Make sure combustible materials or flammable substances are not stored close to the alternator or prime mover, including the ventilation and exhaust system(s) where applicable.***

If the alternator will not be used immediately, it must be stored in a clean, dry, vibration-free environment. We recommend the use of anti-condensation heaters, when available.

If the alternator can be rotated, turn the rotor a minimum of 6 revolutions every month during storage.

5.2.1 Storage in a Suitable Room

Suitable conditions are:

- Stable temperature conditions in the range from 10 ºC (50 ºF) to 50 ºC (120 ºF). The alternator temperature must be kept above the dew point to prevent condensation in the alternator.
- A dust-free, dry environment with low atmospheric humidity (below 75%) is required. If this requirement cannot be met, the alternator is to be stored welded in plastic sheet with desiccant.
- The ambient air must be clean and free of dust and corrosive gases or salt-laden aerosols.
- If the anti-condensation heaters are switched on and the temperature of the ambient air is above 50 ºC, the alternator must not heat up to above 50 ºC (120 ºF)
    - If the alternator has an anti-condensation heater, the heater should be switched on and its function checked regularly.
    - If there is no anti-condensation heater, or it is not possible to place it in operation, an alternative method is to be used to protect the alternator against condensation.
- Make sure the alternator sits on a stable surface free of vibration and protected against knocks. If vibration is to be expected, the alternator must be isolated by placing suitable vibration elements under the alternator's feet.

 Copyright © 2026 Cummins Inc

- All bare surfaces on the alternator are protected on delivery. Regularly check the protection and proceed as follows in case of damage:
  1. Clean any rust film and other dirt from bare surfaces (ends of shaft, flange, screws etc.).
  2. Cover cleaned surfaces using protective lacquer or protective wax (Tectyl 511M or 846K).
  3. Ensure the layer of lacquer provides a seal!
  4. Sleeve bearings are to be protected against corrosion in accordance with the information from the sleeve bearing manufacturer and their protection regularly checked.
  5. Additionally, Cummins recommends adding a drying agent to the sleeve bearing housing.

  If storage is longer than 18 months, the bearing shells of the sleeve bearings must be replaced.

5.2.2 Storage in Unsuitable Conditions (less than 2 Months)

Protect the alternator against insects and other small animals. Prevent corrosion, moisture or the formation of condensation in and on the alternator. For temporary outdoor storage during transport or if suitable store room conditions are not available, the alternator must not be left unprotected in the transport packaging.

1. Fully protect the alternator from rain. The cover must be well ventilated to permit the circulation of air around the alternator. If the alternator is left in the transport packaging, ventilation openings must be made in the packaging.
2. Place alternator with transport frame on blocks so that no moisture can enter the alternator or the transport frame from below. The transport frame and the alternator must be at least 100 mm (4 inch) off the ground.
3. Make sure the alternator is well ventilated. Switch on the anti-condensation heater.

5.2.3 Storage in Unsuitable Conditions (longer than 2 Months)

By storage under unsuitable conditions longer than 2 months, the warranty will expire immediately unless an exception has been granted by contacting the supplier in writing.

5.3 Corrosion Protection

5.3.1 Bare Surfaces

List the corrosion protection measures taken, check their effectiveness with the manufacturer and check them regularly. Correct any malfunctions and treat corrosion immediately.

1. Make sure the lacquer or wax seals the part to protect it
2. The ambient air must be clean and free of dust and corrosive gases or salt-laden aerosols
3. All bare surfaces on the alternator are protected with Tectyl or protective lacquer on delivery. Regularly check the protection and proceed as follows in case of damage:
   a. In case of damage, clean any rust film and other dirt from bare surfaces (ends of shaft, flange, screws etc.).
   b. Cover cleaned, damaged surfaces using protective lacquer or protective wax (Tectyl 511M or 846K).

5.3.2 Alternators Fitted With Sleeve Bearings

NOTICE
If the transport lock is re-tightened to a higher torque, the bearing will be damaged. For additional information contact the manufacturer.

Refer to the manual from the sleeve bearing manufacturer. If the instructions from the sleeve bearing manufacturer differ from those in this manual, the instructions from the bearing manufacturer apply.

To protect the sleeve bearings against corrosion take the following measures:

- Fittings on the sleeve bearings are sealed in the factory and sealing lacquer applied.
  1. If the sleeve bearing has already been filled with oil (e.g. after test run on the unit), drain this oil.
  2. Spray Tectyl 511 or equivalent with a compressed air tool through the filler opening into the bearing. Repeat this corrosion protection treatment every six months. For this purpose it is recommended to open the packaging at the bearings.
  3. Check the compatibility of synthetic oil with bearing materials, corrosion protection materials and oil filling.
  4. Remove the sight glass for the oil ring, remove the oil and open the oil drain.
  5. Spray corrosion protection agent into the openings using compressed air.
  6. The parts of the bearing must be fully covered with lubricant to prevent corrosion during the storage period.
  7. Seal the sight glasses and the oil drain.
  8. Repeat the procedure on the second bearing.
  9. After protection against corrosion, carefully re-seal the packaging to prevent corrosion due to external effects.

Alternators with sleeve bearings are fitted with a transport lock to protect the bearing against damage during transport and storage.

Check the transport lock for bolt tightness regularly.

5.3.3 Alternators Fitted With Anti-Friction Bearings

To prevent brinelling of anti-friction bearings during storage, if the alternator can be rotated, perform the following steps every month:

1. Remove the transport lock.
2. Turn the rotor a minimum of 6 revolutions.
3. Pre-load the bearing using the transport lock.

NOTICE
If the transport lock is re-tightened to a higher torque, the bearing will be damaged. For additional information contact the manufacturer.

5.3.4 Alternators Fitted With Air-Air Cooler

Check the effectiveness of the corrosion protection measures annually. Or more frequently in particularly unfavorable ambient conditions. Renew the corrosion protection measures if necessary.

1. Clean the entire cooling path by blowing out with dry air.

5.3.5 Alternators Fitted With Air-Water Cooler

Check the effectiveness of the corrosion protection measures annually. Or more frequently in particularly unfavorable ambient conditions. Renew the corrosion protection measures as necessary.

1. Drain the existing cooling water.
2. Clean the cooling water pipes and flush using clean, clear water.
3. Dry the cooler with warm, pre-dried air.

 Copyright © 2026 Cummins Inc

5.3.6 Connections and Openings

- Clean the cooler and pipes.
- Dry pipes using blown warm/dry air.
- Cable openings, terminal box openings and flange openings should be covered or capped off to prevent ingress.

5.4 Remove Corrosion Protection

NOTICE
Do not remove the anti-corrosion coatings using emery paper.

Before operating a corrosion-protected alternator, remove the measures taken and logged for storage and establish the state required to perform commissioning

- Remove any drying agent that may have been placed in the alternator.
- Remove the anti-corrosion coatings using cleaner´s solvent or a similar oil-based solvent.
- Ensure that all necessary fluids (e.g. oil, grease, water) are added in the correct amount to the alternator before it is taken into operation.

5.4.1 Alternators Fitted With Anti-Friction Bearings

Before putting the alternator into service, refer to the following table.

TABLE 2. ANTI-FRICTION BEARING STORAGE

Bearing Type	Not Rotated during Storage	Rotated during Storage
Re-Greaseable Bearing(s)	If stored less than 6 months, put the alternator into service. If stored between 6 to 12 months, re-grease the bearings(s) during the first run then put the alternator into service. If stored more than 12 months, replace the bearing(s) then put the alternator into service.	If stored less than 6 months, put the alternator into service. If stored between 6 and 24 months, re-grease the bearing(s) during the first run then put the alternator into service. If stored more than 24 months, replace the bearing(s) then put the alternator into service.

5.4.2 Alternators Fitted With Sleeve Bearings

The removal of substances used the protection against corrosion in the sleeve bearings and further steps are described in the operating instructions for the sleeve bearings.

After extended storage, check the bearings for corrosion damage.

1. Clean the bearing housing from the exterior. Dust and dirt will hinder the dissipation of heat from the bearing.
2. Remove any drying agent that may have been placed in the bearing housing.
3. Re-tighten the joint screws and the flange screws; Take the torques from the documentation from the manufacturer of the sleeve bearing or contact the manufacturer with the machine number.
4. Check that the sight glass is correctly seated.
5. Check the sight glass for the oil ring on the top of the bearing. This should be tightened hand-tight (12-16 Nm)

6. Tighten all plugs to the required tightening torque.

5.4.3 Cooling Systems

Refer to the operation and maintenance instructions from the cooler manufacturer.

5.4.3.1 Alternators Fitted With Air-Water Cooler

Fill and operate the water cooler according to the operating and maintenance instructions from the cooler manufacturer. You will find these instructions in the alternator information pack.

5.4.3.2 Alternators Fitted With Air-Air Cooler

Operate the air-air cooler according to the operating and maintenance instructions from the cooler manufacturer. You will find these instructions in the alternator information pack.

5.4.4 Condensed Water Drain

⚠ WARNING

Condensed Water

Operating an alternator with condensed water in the windings can cause serious injury by electric shock, burns or exposure to flying debris and particles. To prevent injury and before operating the alternator:

- ***Use anti-condensation heaters (if fitted) to prevent condensation accumulating.***
- ***Check for condensed water.***
- ***If condensed water is present, drain/remove the water, dry and inspect the alternator, refer to: Maintenance and Servicing Chapter.***

Check whether condensed water has formed in the alternator. If there is condensed water present, open the drain plug at the lowest point on the alternator and close again after draining the condensed water.

5.5 Oil Drain Points

⚠ CAUTION

Hazardous Substances

Hazardous substances can cause minor or moderate injury. Prolonged or repetitive exposure to hazardous substances can cause serious medical conditions. To prevent injury:

- ***Always read and obey the instructions provided by the product manufacturer.***
- ***Use, handle and store substances as specified by the product manufacturer.***
- ***Always wear appropriate personal protective equipment, refer to Safety Precautions Chapter.***

 Copyright © 2026 Cummins Inc

TABLE 3. NON-DRIVE END

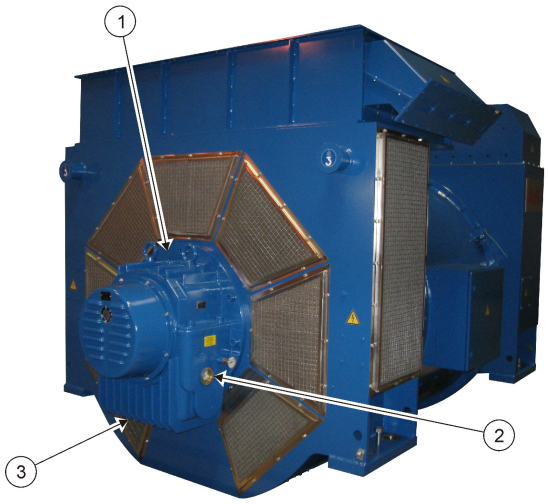

No	Description
1	Oil Ring Sight Glass
2	Oil Sight Glass
3	Oil Drain

TABLE 4. DRIVE END

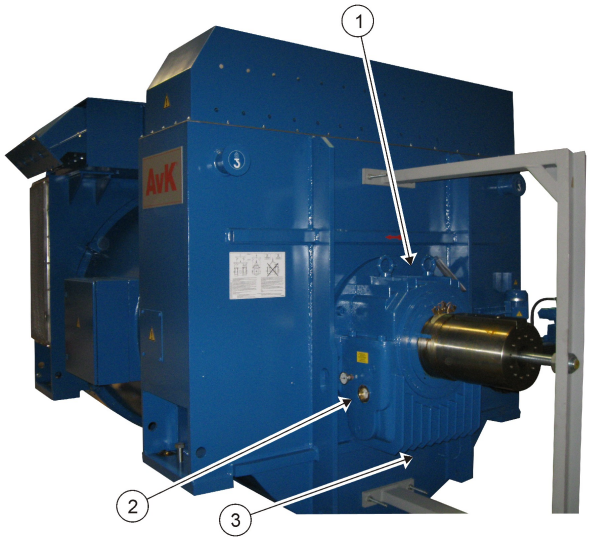

No	Description
1	Oil Ring Sight Glass
2	Oil Sight Glass
3	Oil Drain

6 Application of the Alternator

It is the customer's responsibility to make sure that the selected alternator is suitable for the final application.

⚠ WARNING

Incorrect or Improper Use

Incorrect or improper use of the alternator may result in equipment damage, serious injury or death. To prevent equipment damage, injury or death:

- ***Always select the correct specification alternator for the intended use and application.***
- ***Make sure the alternator and prime mover are compatible and suitable for the intended application.***
- ***Always install the alternator in accordance with the original manual(s) and technical drawing(s) supplied with the alternator.***
- ***Obey locally applicable rules and regulations.***
- ***Make sure the alternator is operated in accordance with the manual(s) and within the limits of the alternator rating plate.***
- ***Do not use a damaged or defective alternator.***

If a defect(s) is discovered:

- ***Shut down and isolate the alternator from all energy sources.***
- ***Remove or isolate stored energy.***
- ***Use lock out / tag out safety procedures.***
- ***Prevent further use of the alternator until it is repaired and returned to a serviceable condition.***

6.1 Environment

All STAMFORD® and AvK® alternators are protected to a minimum rating of IP23 as standard.

IP23 is not adequate protection for use outdoors without additional measures.

The alternator may have been specified with a higher level of protection, the rating plate/nameplate and/or order documentation may provide additional details of this, if in doubt confirm IP rating of the alternator with the manufacturer. If the operating environment is changed after purchase, refer to the manufacturer for a revised alternator rating.

6.2 Air Flow

Make sure that the air inlets and outlets are not obstructed when the alternator is running.

 Copyright © 2026 Cummins Inc

6.3 Airborne Contaminants

⚠ CAUTION

Dust & Airborne Particles/Fumes

Dust and other airborne particles and fumes can cause minor or moderate injury by irritating the lungs and eyes. Prolonged or repetitive exposure can cause serious medical conditions. To prevent injury:

- ***Use mechanical vacuum extraction to remove dust and airborne particles or fumes.***
- ***Ventilate the area fully.***
- ***Always wear the appropriate personal protective equipment. Refer to Safety Precautions Chapter.***

NOTICE

Contaminants such as salt, oil, exhaust fumes, chemicals, dust, and sand will reduce the effectiveness of the insulation and the life of the windings. Consider using air filters and an enclosure to protect the alternator.

6.4 Humid Conditions

The water carrying capacity of air depends on temperature. If the air temperature falls below its saturation point, dew may form on the windings, reducing the electrical resistance of the insulation. In humid conditions, additional protection may be required even if the alternator is fitted inside an enclosure. Anti-condensation heaters are supplied on request.

6.5 Anti-Condensation Heaters

⚠ DANGER

Live Electrical Conductors

Live electrical conductors can cause serious injury or death by electric shock and burns. To prevent injury and before working on live conductors:

- ***Shut down and isolate the alternator from all energy sources.***
- ***Remove or isolate stored energy.***
- ***Test isolated parts for electrical isolation using a suitable voltage tester.***
- ***Use lock out/tag out safety procedures.***

⚠ WARNING

Condensed Water

Operating an alternator with condensed water in the windings can cause serious injury by electric shock, burns or exposure to flying debris and particles. To prevent injury and before operating the alternator:

- ***Use anti-condensation heaters (if fitted) to prevent condensation accumulating.***
- ***Check for condensed water.***
- ***If condensed water is present, drain/remove the water, dry and inspect the alternator, refer to: Maintenance and Servicing Chapter.***

⚠ WARNING

Hot Surfaces and Fire

Contact with hot surfaces can cause serious injury and death by burns. A risk of fire exists where hot surfaces are contacted by combustible items. To prevent injury, death or risk of fire:

- ***Avoid contact with hot surfaces.***
- ***Always wear the appropriate personal protection equipment, refer to: Safety Precaution Chapter.***
- ***Make sure combustible materials or flammable substances are not stored close to or contact the anti-condensation heater (if fitted).***
- ***Make sure combustible materials or flammable substances are not stored close to the alternator or prime mover, including the ventilation and exhaust system(s) where applicable.***

Power to the anti-condensation heater is supplied from a separate source. Anti-condensation heaters raise the air temperature around the windings to deter condensation forming in humid conditions when the alternator is not operating. Best practice is to energize the heaters automatically when the alternator is off.

6.6 Enclosures

⚠ WARNING

Enclosures

Alternators may be installed within an enclosure for environmental protection, noise reduction or transportation reasons. Before entering the enclosure to prevent injury or death, personnel must:

- ***Know the related hazards / risks.***
- ***Have a safe access route in to and out of the enclosure, have sufficient ventilation and obey the alternator hazard zones.***
- ***Wear the appropriate protective equipment.***

Additionally when working with Medium or High Voltage alternators:

- ***Enter the enclosure when the alternator is operating, only if absolutely necessary.***
- ***To minimize risks to personnel use remote diagnostic, monitoring and measuring systems.***

⚠ WARNING

Water ingress during rainy season could lead to electrical shock near alternator, and other electrical components.

- Fit an enclosure to protect the alternator from adverse environmental conditions.
- Make sure that air entering the alternator is of adequate flow rate, free from moisture and contaminants and below the maximum ambient temperature on the rating plate.
- The airflow should be modeled to identify and prevent hot air from re-circulating within the enclosure.
- Make sure there is sufficient access around the alternator for safe maintenance.

 Copyright © 2026 Cummins Inc

6.7 Vibration

High or increasing vibration levels are indicative of changes in the condition of the alternator. Normal levels vary widely as a function of the use, the type and the alternator foundation. Typical causes of high vibration levels are:

- The alignment has changed
- Bearing wear or bearing damage
- Vibration is occurring on machines connected or the vibration has changed
- Fastening or foundation screws have loosened
- Rotor imbalance has changed
- Couplings are worn

The following instructions are part of the following two ISO standards:

ISO 10816-3 Mechanical vibration - Evaluation of machine vibration by measurements on non-rotating parts: Part 3: Industrial machines with nominal power above 15 kW and nominal speeds between 120 r/min and 15 000 r/min when measured on site.

ISO 8528-9 Reciprocating internal combustion engine driven alternating current alternator sets: Part 9: Measurement and evaluation of mechanical vibrations.

6.7.1 Measuring Equipment

The measuring equipment must be able to measure the effective broadband vibration with a linear frequency response from at least 10 Hz to 1000 Hz. Depending on the vibration criteria this aspect can require measurements of displacement or velocity or a combination of the two. The lower limit for the frequency range with a linear frequency response must, however, not be less than 2 Hz for machines with speeds of 600 rev/min and below.

6.7.2 Measuring Points

Measurements are normally made on accessible parts of the alternator. Make sure that the measurements appropriately reflect the vibration in the bearing housing and do not contain any local resonances or amplification. The locations and directions of the vibration measurements are to be selected so that they offer appropriate sensitivity for the alternator dynamic forces. Typically this aspect requires two orthogonal radial measuring points on each bearing, as shown in **Figure 17 on page 39**. The transducers can be applied at any angular position on the bearings. Alternators are measured in vertical, axial and horizontal directions. The measuring points and measuring directions are to be noted together with the measured values.

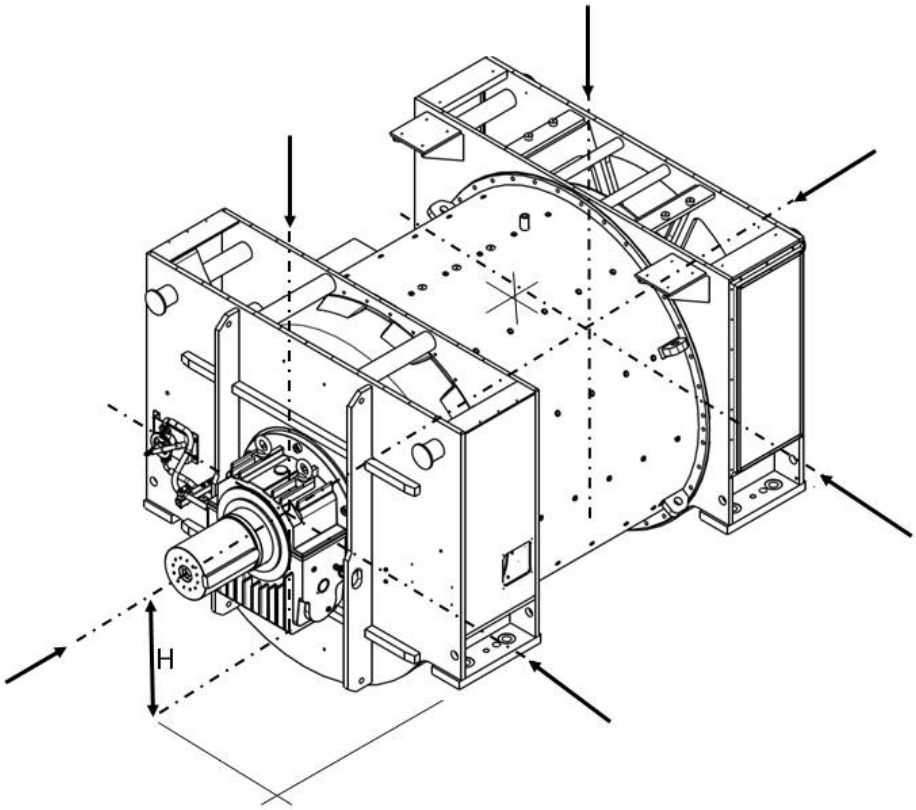

FIGURE 17. DIN 10816-3 - SPECIFICATION FOR MEASURING POINTS

6.7.3 Definition in Accordance with ISO 10816-3

ISO 10816 -3 provides a general description of the two evaluation criteria for determining the magnitude of the vibration on different machine classes. One criterion takes into account the magnitude of the broadband vibration observed, the other takes into account changes in magnitude (both increases and reductions).

 Copyright © 2026 Cummins Inc

TABLE 5. ISO 10816-3

Division of the vibration magnitude zones					
		Large machines with nominal output powers over 300 kW and not more than 50 MW		Medium-sized machine with nominal output powers 15 kW to 300 kW	
		Electrical machines with axis heights H > 315 mm		Electrical machines with axis heights 160 mm < H < 315 mm	
Sub-assembly	**Zone limit**	**Effective value for the vibration displacement**	**Effective value for the vibration velocity**	**Effective value for the vibration displacement**	**Effective value for the vibration velocity**
		µm	mm/s	µm	mm/s
Rigid	A/B	29	2.3	22	1.4
	B/C	57	4.5	45	2.8
	C/D	90	7.1	71	4.5
Elastic	A/B	45	3.5	37	2.3
	B/C	90	7.1	71	4.5
	C/D	140	11	113	7.1

6.7.4 Definition in Accordance with ISO 8528-9

ISO 8528-9 refers to a broad band of frequencies between 10 and 1000 Hz. The following table is an extract from ISO 8528-9 (Table C.1, value 1). This simplified table contains the vibration limits by kVA range and the speed for acceptable generator set operation.

TABLE 6. ISO 8528-9

Declared engine speed revs/min	Rated power output of the generating set		Vibration velocity V_{rms} Value 1 mm/s
	(cos phi = 0.8) kVA	KW	
> 1300 but < 2000	> 250	> 200	20
> 720 but < 1300	> 250 but < 1250	> 200 but < 1000	20
	> 1250	> 1000	18
=< 720	> 1250	> 1000	15

6.7.5 Warning Values and Shutdown Values

We recommend regularly checking the condition of the alternator using a suitable instrument for vibration monitoring during servicing, or checking the condition continuously. For this purpose it is best to measure initial values and to use these values as the basis for the regular monitoring of the alternator to detect possible degradations. The warning values and shutdown values are to be adjusted in accordance with the related standard and in combination with the existing operating conditions.

⚠ WARNING

Exposure to Ejected Debris and Particles

Ejected debris and particles can cause serious injury or death by impact, severing or puncturing. Exposure to mechanically driven release of debris and particles exists in all directions (horizontally and vertically) in the areas surrounding the alternator air outlet(s), air inlets(s) and the open shaft end (also commonly known as the Drive End (DE)). To prevent injury or death:

- ***Keep away from the air inlet(s) and air outlet(s) when the alternator is operating.***
- ***Do not position operator controls near the air inlet(s) or air outlet(s).***
- ***Do not cause overheating by running the alternator outside rating plate parameters.***
- ***Do not overload the alternator.***
- ***Do not operate an alternator displaying excessive vibration.***
- ***Do not synchronize parallel alternators outside the specified parameters.***

If the measured vibration of the generator set is not within the limits:

1. Consult with the generator set manufacturer to reduce vibration to an acceptable level.
2. Contact CGT Customer Service to assess the impact on bearing and alternator life expectancy.

 Copyright © 2026 Cummins Inc

This page is intentionally blank.

7 Generator Set Coupling

7.1 General

Obey locally applicable rules and regulations when connecting the alternator to a prime mover.

If/when carrying out welding operations, do not use alternator as (earth) ground.

⚠ DANGER

Falling Mechanical Parts

Falling mechanical parts can cause serious injury or death by impact, crushing, severing or trapping. To prevent injury or death and before lifting:

- ***Check the capacity, condition and attachment of lifting equipment.***
- ***Check the capacity, condition and attachment of accessories for lifting.***
- ***Check the capacity, condition and attachment of lifting point(s) on the load.***
- ***Check the mass, integrity and stability of the load.***
- ***If available: Install drive end and non-drive end transit fittings to prevent movement and damage to bearings.***
- ***Keep the alternator horizontal when lifting.***
- ***Do not use alternator lifting points for lifting a complete generator set.***
- ***Do not use cooler lifting points for lifting the alternator or a complete generator set.***
- ***Do not remove the lifting label attached to one of the lifting points.***

⚠ DANGER

Rotating Mechanical Parts

Rotating mechanical parts can cause serious injury or death by crushing, severing or trapping. To prevent injury:

- ***Before operating the alternator: The rotating coupling between the alternator and prime mover must be covered by a guard or cover.***
- ***Before attempting service or maintenance tasks or removing covers from rotating parts: Shut down and isolate the generator set from all energy sources, isolate stored energy and use lock out/tag out safety procedures.***

⚠ WARNING

Hot Surfaces and Fire

Contact with hot surfaces can cause serious injury and death by burns. A risk of fire exists where hot surfaces are contacted by combustible items. To prevent injury, death or risk of fire:

- ***Avoid contact with hot surfaces.***
- ***Always wear the appropriate personal protection equipment, refer to: Safety Precaution Chapter.***
- ***Make sure combustible materials or flammable substances are not stored close to or contact the anti-condensation heater (if fitted).***
- ***Make sure combustible materials or flammable substances are not stored close to the alternator or prime mover, including the ventilation and exhaust system(s) where applicable.***

 Copyright © 2026 Cummins Inc

⚠ WARNING

Coupling an Alternator

Moving mechanical parts during coupling can cause serious injury by crushing, severing or trapping. When coupling the alternator to a prime-mover or when installing large components, to prevent injury:

- ***Personnel must keep limbs and body parts away from coupling surfaces during coupling and/or installing operations.***

7.2 Preparation of the Alternator

Prepare the alternator as follows before installation:

1. Measure the insulation resistance of the windings as described in **Section 8.4.3 on page 58**.
2. If necessary, remove the transport lock. Keep it in a safe place for future use. To prevent bearing damage the transport lock must always be attached to the alternator if the alternator is moved, or placed in storage. See **Section 5.1.1 on page 25**.
3. Remove the anti-corrosion coating from the end of the rotor shaft and the alternator feet using white spirit or a similar oil-based solvent.

7.2.1 Alternators with Fixed Non-drive End Anti-friction Bearings

Alternators with two bearings must be connected to the prime mover using elastic couplings to ensure continuous free axial movement between the coupling halves due to thermal expansion of the alternator shaft without bearing damage.

The non-drive end bearing is fixed. The axial thermal expansion of the rotor is calculated as described in **Section 7.4.3 on page 50**. If in doubt, contact the manufacturer.

- Make sure the grease is compliant with the specification on the rating plate and make sure the bearing is filled with the correct amount of grease. See **Section 5.4 on page 32**.

NOTICE

An excessive amount of grease or old grease in the bearings during operation will result in serious bearing damage. Pay regard to the storage time and the grease amount.

7.2.2 Alternators with Fixed Drive-end Anti-friction Bearings

Alternators with two bearings must be connected to the prime mover using elastic couplings to ensure continuous free axial movement between the coupling halves due to thermal expansion of the alternator shaft without bearing damage.

The drive end bearing is fixed. The axial thermal expansion of the rotor is calculated as described in **Section 7.4.3 on page 50**. If in doubt, contact the manufacturer.

- Make sure the grease is compliant with the specification on the rating plate and make sure the bearing is filled with the correct amount of grease. See **Section 5.4 on page 32**.

NOTICE

An excessive amount of grease or old grease in the bearings during operation will result in serious bearing damage. Pay regard to the storage time and the grease amount.

7.2.3 Alternators with Sleeve Bearings

1. The drive-end bearing is always fixed. Fill the sleeve bearing with oil. For this purpose refer to the outline drawing for the viscosity of the oil. If a lubricant is not stated on the outline drawing, use the lubricant recommended by the sleeve bearing manufacturer.

7.2.4 Recommendations for Coupling Assembly

7.2.4.1 Balance Condition of the Rotor

Balance the rotor coupling half corresponding to the rotor balancing. A standard rotor is dynamically balanced using half keys. The type of balancing is marked on the end of the rotor shaft:

H = Half key

F = Whole key

N = No key

7.2.4.2 Assembly

1. Refer to the coupling-specific instructions from the coupling manufacturer.
2. The coupling can be heavy; use suitable lifting equipment.
3. Clean the anti-corrosion coating from the coupling seat on the shaft and compare the dimensions of the end of the shaft and the coupling with the outline drawing provided.
4. Make sure that the key slots in the coupling and the shaft are clean, free of burrs and undamaged.
5. Lubricate the shaft and the hub bore with a thin layer of resin-free oil to ease the assembly of the coupling half.

   Never lubricate mating surfaces with molybdenum disulfide (MoS_2) or similar products.
6. If it is necessary to heat the coupling to ease fitting, read the temperature information from the coupling manufacturer.
7. For assembly of heated couplings we recommend to have the key at bottom dead center (on 6:00 position below shaft), to prevent surface damage on the shaft and hub beside the key.

To prevent damage to the bearings, do not put additional forces on the bearings while assembling the coupling half. If axial pressure is required to assemble the coupling hub, use the threaded center bore in the alternator shaft to install a pushing rod.

7.3 Mounting Design

7.3.1 General

The mounting design and construction is the responsibility of the customer or a third-party. The mounting design must ensure safe operating conditions and good access for servicing and monitoring. Cooling airflow must be unhindered to and from the alternator. Nearby machines or equipment must not heat the cooling air for the alternator or its attachments, such as the bearings.

The mounting must be stable, stiff and free of external vibration. Check for resonance; the natural frequency of the mounting with mounted alternator must not lie within ±20% of the operating frequency.

The mounting must be designed to support the weight of the alternator and include air, water, oil and cable ducts. The dimensions of the connection features must match the corresponding dimensions on the outline drawing provided.

The mounting must be designed to accomodate all the manufacturing tolerances.

 Copyright © 2026 Cummins Inc

7.3.2 Mounting Forces

The mounting and the fastening screws must withstand mechanical moments that occur during alternator starting, operation and transient events. Refer to the technical data sheet for the loads.

The calculation of the mounting forces is not included in the items supplied, for this reason the customer or a third-party is responsible for this task. If necessary, calculation can be agreed in the project planning phase.

7.3.3 Mounting on Marine Applications

7.3.3.1 General Requirements

The classification and design requirements of the certification authority apply to the design and implementation of mountings on marine applications.

7.3.3.2 Calculations

Check and calculate during the project phase

1. The natural frequency of vibration in the overall system in 6 degrees of freedom.
2. Calculate the static displacements in x, y and z directions on all elastic components. Take into account all loads effective at nominal power output due to the inherent weight of the motor, the motor nominal torque (or output torque for flange-mounted gearboxes), and ship pitch and roll motion.
3. Compare the displacement values calculated with the values allowed for the electrical components.
4. Calculate the forced damped vibration.

The result must conform to the specifications for the marine classification and be agreed with the manufacturer of the component.

7.3.3.3 Fastening Alternator to Base

Only screw joints must be used for fastening the drive systems to the ship-borne mounting.

To keep settling to a minimum, the number of joints in the screw joints is to be limited to a minimum.

The contact surfaces for screw heads and nuts must be flat and machined parallel.

Do not tack weld alternator mounting screws and nuts.

The screw joint must be designed for the maximum possible load that can occur.

The required pre-load on the mounting screws is to be defined in agreement with the manufacturer of the prime mover or the manufacturer of the related system component.

The preferred fastener type is a cap screw, installed so that the screw pre-load can be checked at any time.

7.3.3.4 Requirements

Refer to the manufacturer's installation information during the mechanical mounting of the individual components on the foundation.

Design of the mounting must be agreed with the certification authority.

Make sure the assembly and inspection openings on the drive systems provided for maintenance measures remain accessible.

Final fastening must be done after alignment done. Consider the operation-related thermal expansion and the dynamic behavior of the system components (coupling, gearbox etc.) during alignment.

Make sure that the alignment of the individual system components to each other does not change during mechanical work on the mounting.

All welding work in the area of the mounting must be completed before mounting the alternator.

During the design of a resilient mounting, consider the aging and natural wear of the mounting elements. Check and log the settling rates at intervals specified by the manufacturer. Replace the elastic mounting when the maximum allowed amount of settling occurs.

7.3.4 Installation on Concrete Foundations

7.3.4.1 Items Supplied

The installation shims, fastening screws and mounting pads or bed plates are not included in the normal items supplied with the alternator. These can be supplied to special order.

7.3.4.2 Calculations

Check and calculate during the design phase

1. The natural frequency of vibration for the overall system in 6 degrees of freedom.
2. Calculate the forced damped vibration.
3. Calculate the mounting forces and screw joints

The results must conform to the specifications and be agreed with the manufacturer of the related system component.

7.3.4.3 Prepare the Foundation and the Holes in the Foundation

Mounting pads in accordance with DIN 799 or bed plates can be used to anchor the alternator in a concrete foundation.

Take into account the following points during the preparation of the foundation:

- Compare the position of the holes in the foundation and the height of the foundation with the related dimensions on the outline drawing.

7.3.4.4 Prepare the Mounting Pads or the Bed Plates

If required, shims and mounting pads are supplied as separate parts for fitting on site.

To ensure the firm seating of the mounting pads in the concrete, they must be unpainted and free of dirt and dust.

1. Lift the alternator with a crane to assemble the mounting pads or bed plates to the alternator.
2. Clean the parts that are cast in the concrete.
3. Clean parts protected with an anti-corrosion coating using solvent.
4. Only use greased alignment screws into the mounting pads or bed plates.

Make sure that clearances and fasteners are free of concrete.

7.3.4.5 Install the Alternator

Lift the alternator carefully and, together with the coupling half and bed plates or mounting pads, fit it into the holes that have been made on the existing foundation. The coupling is fitted in accordance with the specifications from the coupling manufacturer.

7.3.4.6 Position the Mounting Pads or the Bed Plates

The bed plates or mounting pads must either be positioned together with the alternator or separately, so that the alternator can be aligned afterwards within the range of its adjustment features.

 Copyright © 2026 Cummins Inc

7.3.4.7 Cementing

NOTICE
Cracks in the concrete or poor fastening to the concrete foundation can cause the alternator to become loose. **Fill the holes in the foundation completely and avoid cavities.** **Cementing the alternator in the foundation is a very important part of the installation. Refer to the instructions of the concrete manufacturer.** **Use high-quality concrete that is not subject to shrinkage to prevent problems during cementing.**

7.3.4.8 Final Installation and Inspection

1. After the concrete has hardened, re-tighten the foundation bolts.
2. Lock the nuts using an approved locking system.
3. Tighten the fastening screws.
4. Check and correct the alignment to ensure the alternator runs with the permissible vibration.
5. Complete the installation by fitting dowel pins.

7.3.5 Installation on Steel Foundation

7.3.5.1 Items Supplied

Installation shims or fastening screws are not included in the normal items supplied. These can be supplied to special order.

7.3.5.2 Inspect the Foundation

Before lowering the alternator onto the foundation:

1. Clean the foundation thoroughly
2. Check that the foundation is flat and level (parallel error maximum 0.1 mm (4.0 mil))
3. Check that the foundation is free of external vibration.

7.3.5.3 Install the Alternator

Lift the alternator carefully and, together with the coupling half, fit it on the existing foundation. The coupling is fitted according to specifications from the coupling manufacturer.

7.3.5.4 Coupling Cover and Enclosures

Before fitting enclosures and operating the alternator but after installing and aligning the alternator, make sure that there are no tools or foreign bodies left inside the alternator or the enclosures.

Keep the alignment and installation equipment together with the transport lock for future use.

7.4 Align the Prime Mover and Alternator

7.4.1 General

To ensure a long, satisfactory service life for both the prime mover and the alternator, both must be correctly aligned. This means that the radial and angular offset between the two shafts on the machines must be minimized.

Be sure to complete an alignment report. Claims relating to damage can only be considered if an alignment report is available. Before starting the alignment work, remove all transport locks and rotor fastenings. Undertake alignment with great care, as alignment errors will result in bearing and shaft damage. Even small alignment errors will result in uneven running of the machines and bearing damage.

7.4.2 Theory of Alignment

The accuracy of alignment is related to the tools used for the alignment (dial gauges, laser measuring instrument).

- A laser measuring instrument is most accurate.

One of the two machines to be coupled is defined as the reference point.

On power generator sets this reference point is generally the prime mover.

- Fine alignment is dependent on the design of the machine, as follows:

TABLE 7. ALIGNMENT OFFSET AND SPEED

Nominal speed	Maximum radial offset
1800 rpm	0.05 mm / 2 Mils
1500 rpm	0.06 mm / 2.5 Mils
1000 rpm	0.08 mm / 3 Mils
750 rpm	0.09 mm / 3.5 Mils
600 rpm	0.11 mm / 4 Mils
375 rpm	0.15 mm / 6 Mils

General figure for the angular offset: ≤ 0.05 mm / 100 mm (5 Mils / 10 inch) coupling diameter

Axial coupling position of the prime mover to alternator has to be within coupling manufacturer's specifications.

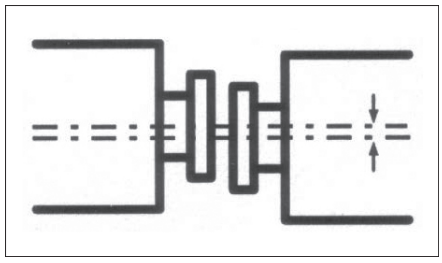

FIGURE 18. RADIAL OFFSET

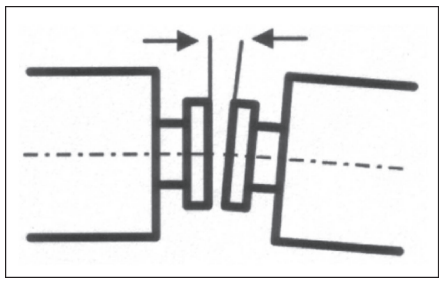

FIGURE 19. ANGULAR OFFSET

 Copyright © 2026 Cummins Inc

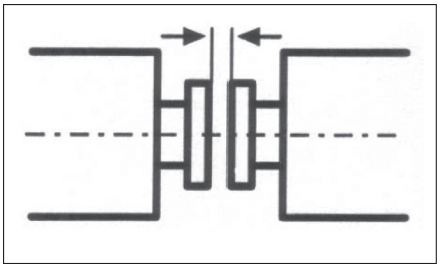

FIGURE 20. AXIAL OFFSET

The alternator, gearbox and prime mover may have different coefficients of thermal expansion. Take this into account when aligning at ambient temperature, so that the generator set is aligned when at operating temperature. (see section below).

7.4.3 Compensate for Thermal Expansion

Operating temperatures have a significant effect on alignment and must be taken into account. The temperature of the alternator under operating conditions is higher than during installation. The center of the shaft will be higher during operation, i.e. further away from the base than at rest due to thermal expansion.

Thermally-compensated alignment may be necessary depending on the operating temperature of the alternator, the type of coupling, the distance between the two machines etc.

7.4.3.1 Vertical Thermal Expansion

Vertical thermal expansion is always to be taken into account.

The thermal expansion of the alternator can be calculated approximately using the distance between the base and the center of the shaft:

$\Delta H = \alpha \times \Delta T \times H$

Where

ΔH= Thermal expansion [mm]

α= 10 × 10-6 K^{-1}

ΔT= Temperature difference between alignment temperature and operating temperature to be expected [°K]

H= Shaft height [mm] (see outline drawing)

Take into account the thermal expansion of the alternator in relation to the prime mover to determine the overall thermal expansion.

7.4.3.2 Axial Thermal Expansion

Axial thermal expansion is always to be taken into account.

The calculation is made from the fixed bearing on the alternator to the end of the shaft on the drive side (see rotor drawing in the Customer Documentation).

The fixed bearing is on the B end (NDE - non-drive end) of the alternator for anti-friction bearings and on the A end (DE - drive end) of the alternator for sleeve bearings. For additional information on the fixed bearing and the thermal expansion contact the manufacturer.

The thermal expansion can be calculated approximately using the distance between the fixed bearing and the other end of the rotor shaft:

$\Delta L = \alpha \times \Delta T \times L$

Where

ΔL= Thermal expansion [mm]

α=10 × 10-6 K^{-1}

ΔT= Temperature difference between alignment temperature and operating temperature to be expected [°K]

L= Distance from the fixed bearing to the AE of the shaft [mm]

Make sure that continuous free axial movement is possible between the coupling halves (except fixed couplings) to permit axial thermal expansion of the alternator shaft and prevent bearing damage.

7.4.4 Assemble the Coupling Halves

The coupling halves are assembled in accordance with the requirements from the coupling manufacturer. The coupling halves on the prime mover and alternator are placed together loosely so that they can move freely in relation to each other during the alignment.

7.4.4.1 Run-out on the Coupling Halves

NOTICE
Do not turn alternator rotor using the fan. The fan will not withstand such forces and will be damaged.

The alignment process starts with the measurement of the run-out on the coupling halves. This measurement provides an indication of any inaccuracy on the shaft and/or the coupling halves.

The run-out on the coupling halves is measured in relation to the alternator bearing housing. Fit the dial gauges as shown in **Figure 21 on page 51**. Rotate the rotor shaft with a simple lever. Check the run-out of the coupling half on the prime mover in relation to the bearing housing.

Fill sleeve bearings with oil before rotating. The permissible run-out error is less than 0.05 mm (1.9 mil).

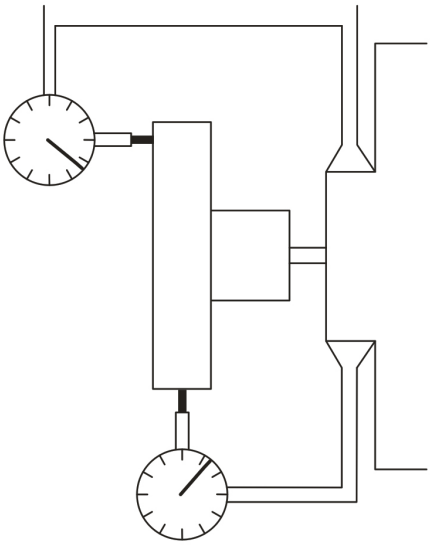

FIGURE 21. MEASUREMENT OF THE RUN-OUT ON THE COUPLING HALF

The alignment must be performed with great care. Otherwise, the prime mover and the alternator can be seriously damaged by heavy vibration. Measure alignment performed according to instructions from the coupling manufacturer. Parallel, angular and axial alignment of the alternator is required.

7.4.5 Coarse Alignment

For ease of alignment and the fitting of shims, alignment screws are fitted to the alternator base.

 Copyright © 2026 Cummins Inc

The alternator stands on the alignment screws. The alternator must stand on all feet (screws) in a plane with a maximum of 0.1 mm (4.0 mil) parallel error. If this is not the case, the alternator will twist or distort, which will result in bearing damage and other damage.

- Make sure the alternator is leveled vertically, horizontally and axially. Make the necessary adjustments by, e.g., placing alignment elements or shims under the feet.

7.4.6 Final Alignment

Sleeve bearings are to be filled with oil before rotating.

NOTICE
Do not turn alternator rotor using the fan. The fan will not withstand such forces and will be damaged.

The alternator is aligned as follows:

1. The alternator must stand on its alignment screws.
2. Turn the rotor with a simple lever and check the axial play.
3. Fit the alignment equipment.
4. If dial gauges are used, their scale must be adjusted so that about half the scale is available in both directions. Check the strength of the dial gauge holder to prevent possible bending, see **Figure 22 on page 52**.

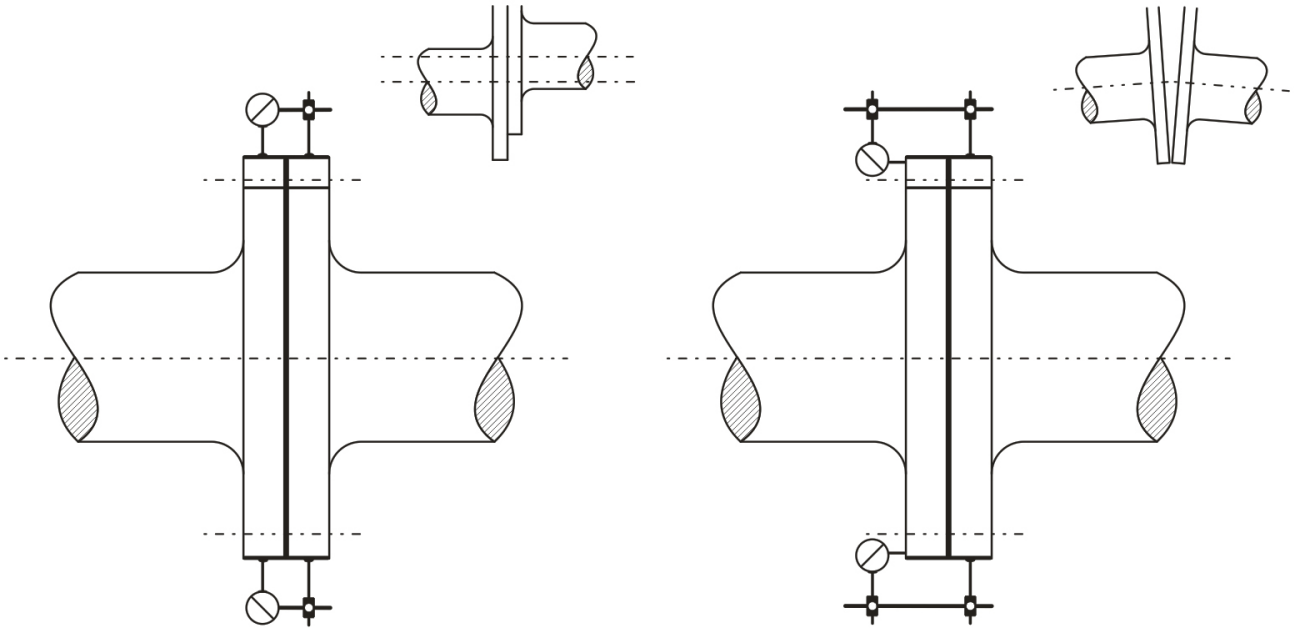

FIGURE 22. ALIGNMENT USING DIAL GAUGES - 1: RADIAL ALIGNMENT, 2: ANGULAR ALIGNMENT

5. Measure and note the values for radial, angular and axial offset in four different positions: top, bottom, right and left, i.e. every 90°, while the coupled shafts are rotated at the same time. Record the values.
6. Align the alternator vertically by turning the alignment screws or by lifting using hydraulic lifters. For ease of radial alignment, alignment screws are fitted to the alternator feet. The expansion of the base frame due to thermal action can affect the accuracy of the alignment (see **Section 7.4.3 on page 50**).
7. If no alignment elements (e.g. Vibracon™) are used, do the following:
   a. Measure the distance between the underside of the alternator feet and the base frame and fabricate appropriate solid blocks, or have the necessary quantity of shims available.

b. Place the solid blocks or shims under the alternator feet. Loosen the alignment screws and tighten the fastening screws.

8. Check alignment again and correct, as required.
9. Re-tighten the nuts and secure them using approved ISO locking elements.
10. Fasten the alternator feet using dowel pins to simplify the possible future re-installation of the alternator; see **Section 7.5 on page 54**

7.4.6.1 Permissible Offset

Definitive alignment tolerances cannot be stated, as there are too many factors that play a role. Excessively large tolerances will cause vibration and may result in bearing damage or other damage. For this reason it is recommended to keep the tolerances as low as possible.

The tolerances stated by the coupling manufacturer only apply to the coupling, not to the alignment of the prime mover and load machine. They can only be used as general figures for the alignment if they are lower than the maximum values stated in **Section 7.4.2 on page 49**.

7.4.6.2 Align an Alternator with Axial Play

In case of alternators that permit axial play in the fixed bearing, an adjustment indicator is fitted and there is a marking on the shaft that indicates the operating center point. The rotor is operated in the correct position if the pointer is aligned with the groove on the shaft. This so-called operating center point does not necessarily match the magnetic center point of the alternator. The fan and magnetic forces can pull the rotor out of the alternator's geometric center point. Pay attention to any adjustment indicator fitted and its position.

7.4.6.3 Align a Two Bearing Alternator

During the alignment of two-bearing alternators the following errors can occur:

1. Radial offset
2. Angular offset
3. Axial offset

If aligning when the generator set is cold, consider that the height of alternator, gearbox and prime mover is different when warm due to differences in thermal expansion.

- Align the coupling (minimum axial offset) according to the instructions from the coupling manufacturer. During this process consider the linear expansion of the shafts when reaching the operating temperature.
- Use suitable alignment aids, e.g. dial gauges or a laser instrument, for the fine radial alignment of the alternator.

7.4.6.4 Align a Single Bearing Alternator

The objective of the alignment on one-bearing alternators is to keep the air gap between the rotor and stator equal all round so that the rotor is exactly aligned radially.

For the axial alignment the distances on the B end (non-drive end) must be met.

Refer to the illustration in the Customer Documentation for the dimension that defines the axial center position of the rotor.

To align the alternator, proceed as follows:

1. Remove the radial transport lock.
2. Roughly align the alternator on the base frame or the bed plates. (See **Section 7.5 on page 54**)
3. Couple the prime mover and alternator without using force.

Pay attention to the following points:

- Crankshaft clearance on the combustion engine.
- Air gap between rotor and stator.

 Copyright © 2026 Cummins Inc

- Axial dimension as per sketch in the Customer Documentation.
- Check the radial alignment accuracy by measuring the distance between the shaft and the machined inside diameter of the bearing plate.

7.4.6.5 Alignment of Alternator with Flange-mounted Gearbox

Refer to the documentation from the gearbox supplier to align an alternator with a flange-mounted gearbox.

7.5 Fit the Dowel Pins

The alternator does not have any bores for dowel pins in its feet. Cummins recommends fitting tapered pins (ISO 8737) to maintain exact alignment and to permit easier re-installation of the alternator if removed.

7.6 Measures for Delayed Commissioning

External vibration will damage bearings and shorten the service life of bearings.

If the alternator is not operated for an extended period after installation, refer to: **Section 5.2**. In addition, rotate the shaft 10 turns at least every 3 months and the fill the self-lubricating bearings with oil. If the alternator is subject to external vibration, the alternator must be decoupled.

8 Mechanical and Electrical Connections

8.1 General

Do not drill additional holes and threads. The alternator will be damaged.

Mechanical and electrical connections are made after installation and alignment. Mechanical connections can include the connection of air ducts, water pipes and/or an oil supply system.

Electrical connections include the connection of line cables and additional cables, ground cables and optionally external fan motors.

8.2 Mechanical Connections

8.2.1 Cooling Air Connections

8.2.1.1 Connect Air Ducts

Clean the air ducts thoroughly before you connect them to the alternator and make sure there are no obstructions in the ducts. Seal the joints using suitable seals. After connecting the air ducts, make sure that there are no leaks.

Alternators that are designed for the possible connection of air ducts have connection flanges shown in the outline drawing.

8.2.1.2 Connect a Cooler to the Alternator

Alternators that are equipped with a heat exchanger for their cooling have a cooling air seal on the heat exchanger.

If the heat exchanger or parts of the cooling system are supplied separately, they must be installed on site as follows:

1. Lift the cooler or the individual parts only by the lifting eyes using suitable lifting equipment.
2. Make sure all connection components are free of dust and dirt.
3. Refer to the outline drawing in the Customer Documentation for the correct installation positions.
4. Lift the cooler parts at the point provided and fasten them using the hardware provided.
5. Make sure all seals are fitted correctly.

8.2.1.3 Connect an External Fan Motor

The external fan motor is generally an asynchronous three-phase motor. The terminal box for the fan motor is on the motor housing. The rating plate on the external fan motor indicates the voltage and frequency to be used. The direction of rotation of the fan is marked with an arrow.

NOTICE
Check the direction of rotation of the external fan motor (fan) visually before you start the alternator. If the fan motor runs in the wrong direction, its phase sequence must be changed.

 Copyright © 2026 Cummins Inc

8.2.2 Connect Cooling Water

8.2.2.1 Air-Water Cooler

Alternators that are equipped with an air-water heat exchanger have connection flanges. Connect the flanges and seal the joints using suitable seals. Refer to the outline drawing in the Customer Documentation for the size of the connection flanges.

- Ensure that the water circuit has no leaks, before starting the alternator.

8.2.2.2 Connect Cooling Water to Sleeve Bearings

Make the connections, make sure they are secure and there are no leaks in the system. Refer to the outline drawing in the Customer Documentation for the size of the connections. After the alternator has run for a time it is necessary to check the cooling system. Make sure the coolant can circulate freely.

8.2.3 Oil Supply for the Sleeve Bearings

Alternators with external lubrication are equipped with oil pipe flanges and optionally pressure limiters and flow indicators.

1. Install all the necessary oil lines and connect the oil supply.
2. Install the oil supply in the vicinity of the alternator so that the pipes to each bearing are of similar length.
3. Test the oil supply before the pipes are connected to the bearings using flushing oil.
4. Check the oil filter and clean or replace if necessary. A replacement filter is not included in the items supplied
5. Install the oil inlet pipes and connect them to the bearings.
6. Install the oil outlet pipes underneath the bearings with a minimum angle of 15°, which corresponds to a fall of 250 - 300 mm/m (3-3,5 inch/foot).

The oil level in the bearings will increase if the fall on the pipes is inadequate; the oil flows too slowly back to the oil tank from the bearings. This will result in malfunctions in the oil flow or even oil leaks. Fill the oil supply with clean oil of the correct type and the correct viscosity. Always use oil of the correct viscosity, stated on the outline drawing. If the type of oil is not clear from the outline drawing, refer to the oil types in the lubricant list from the sleeve bearing manufacturer.

1. Switch on the oil supply and check the oil circuit for any leaks before starting the alternator.
2. The normal oil level is reached between one third and half of the oil sight glass. Check the oil level only at standstill and at ambient temperature.

NOTICE
The bearings are supplied without lubricant. If the alternator is operated without lubricant, immediate bearing damage will result. **Do not drill additional holes and threads. The alternator will be damaged.**

8.2.3.1 Hydrostatic System

Make sure that the hydrostatic system is running and functional before starting or coasting down the alternator.

On the connection of the pipe to the hydrostatic connection for the bearing it must be ensured that the connection on the bearing is not rotated. This connection must be locked using a suitable tool during the installation of the pipe.

Sleeve bearings with hydrostatic lifting are used in critical cases To prevent damage due to metal contact on the bearing surfaces, hydrostatic systems ensure low bearing wear where the alternator starts at low speeds, or with frequent starts/stops, high starting load or very long coast-down times. For these application conditions, the use of hydrostatic systems is strongly recommended by the manufacturer.

The maximum load bearing capacity of the system is defined by the maximum pump pressure. The hydrostatic pump pressure is normally limited to 200 bar. Due to small lubrication gap at the shaft surface in case of metal-on-metal contact, the pump pressure is highest at the start of lifting. Lifting is associated with a noticeable pressure surge. As the lubrication gap increases in size after lifting the shaft, the pressure drops as a function of the bearing geometry and the volume of lubricant. The static pump pressure for supporting the shaft should be around 100 bar.

Refer to the order-specific documentation for the minimum speed for operating an alternator without a hydrostatic system.

8.3 Connect Vibration Sensors

8.3.1 Alternators Fitted With Anti-Friction Bearings

Standard alternators with anti-friction bearings are equipped with bores for the connection of SPM vibration sensors.

8.3.2 Alternators Fitted With Sleeve Bearings

Standard alternators with sleeve bearings do not have any preparation for vibration sensors. These can be supplied to special order.

8.4 Electrical Installation

8.4.1 General Information

⚠ DANGER

Live Electrical Conductors

Live electrical conductors can cause serious injury or death by electric shock and burns. To prevent injury and before working on live conductors:

- ***Shut down and isolate the alternator from all energy sources.***
- ***Remove or isolate stored energy.***
- ***Test isolated parts for electrical isolation using a suitable voltage tester.***
- ***Use lock out/tag out safety procedures.***

⚠ WARNING

Incorrect Electrical Installation and System Protection

Incorrect electrical installation and / or system protection can cause serious injury or death by electric shock and burns. To prevent injury or death and before starting work, personnel:

- ***Have completed related, applicable and approved training.***
- ***Know the equipment, understand the task(s) and procedure(s).***
- ***Know related hazards / risks.***
- ***Know and obey site / location specific emergency procedures and applicable laws and regulations.***

 Copyright © 2026 Cummins Inc

⚠ WARNING

Reconnected Energy Source

Accidental reconnection of energy sources during service and maintenance work can cause serious injury or death by electric shock, burns, crushing, severing or trapping. To prevent injury and before starting any service and maintenance work:

- ***Isolate the alternator from energy sources.***
- ***Prevent alternator use with lock out/tag out safety procedures.***
- ***Do not defeat or bypass the lock out/tag out safety procedures.***

⚠ WARNING

Grounding

Incorrectly grounded alternators can cause serious injury or death or serious equipment damage by electric shock or electrical malfunction. To avoid equipment damage, injury or death:

- ***The alternator must be permanently grounded, unless the application or applicable laws and regulations do not permit alternator grounding.***

Plan the electrical installation thoroughly before implementation. Read the Circuit diagrams supplied with the alternator thoroughly before starting the installation work. It is important that the line voltage and frequency for all electrical equipment correspond to the values stated on the related rating plate or in the circuit diagram.

The line voltage and the frequency must lie within the limits stated in the related standard. The data must correspond to the data on the rating plate and be connected according to the circuit diagram.

8.4.2 Safety

Electrical work must be done by appropriately qualified specialist personnel. The following safety instructions must be followed:

1. Switch off all units including ancillary equipment.
2. Provide securing features to prevent unintentional switching back on.
3. Make sure all parts are disconnected from their related power supply.
4. Short all parts to protective ground and short-circuit the switching circuits.
5. Cover all live parts and cordon off the surrounding area.
6. If the secondary circuit is expanded with a current transformer, make sure that an open circuit does not occur during use.

8.4.3 Insulation Resistance

Measure the insulation resistance of alternators that have been stored or have not been operated for an extended period, before initial commissioning.

1. Ground all parts to which the measuring voltage is not applied.
2. Before measuring the insulation resistance of the winding, disconnect all connections (primary connection, measuring connection, connections to the control system, safety circuit and interference suppression circuit).
3. During insulation measurements, measuring equipment and measuring wires must be disconnected.
4. Before commissioning, measure the insulation resistance on the stator winding from phase to phase and from phase to ground, and also measure the rotor winding to ground.
5. The measurement is to be done using 1 kV DC on low-voltage alternators (< 1 kV) or using 5 kV on high-voltage alternators (≥ 1 kV).

Due to the capacitive charging of the winding, the measuring instrument only indicates the correct value for the insulation resistance after 60 seconds.

- The winding section is to be grounded immediately after switching off the measuring voltage

For excessively low insulation values:

1. Check insulation on the terminals for soiling and moisture.
2. Clean and dry terminals as necessary.
3. Repeat the insulation resistance measurements.
4. Damp windings can result in leakage currents, flashover or breakdowns. Damp windings must be dried.

For low-voltage alternators with nominal voltage < 1 kV, the armature windings as well as in the rotor winding, the insulation resistance must be minimum 5 MΩ at 40 °C.

The minimum insulation resistance of one phase of a three-phase armature winding tested with the other two phases grounded should be approximately twice that of the entire winding. If each phase is tested separately and guard circuits are used on the two phases not under test, the observed minimum resistance should be three times the entire winding.

- As the windings are connected at the pillars or bars, these must be checked during the insulation test and measurement.

NOTICE
On all secondary connections and measuring connections, the maximum test voltage is 500 VDC. The insulation resistance must not be less than 5 MΩ.

- The secondary connections, such as measuring connections to transducers, all connections to the control system, safety circuits and interference suppression circuits must be checked separately.
- Each of these connections must be checked separately on the terminal strip. During this process the insulation resistance of the terminal strip must be measured.

If the insulation resistance on new, cleaned or repaired windings is less than 5 MΩ, the winding must be dried.

8.4.4 Main Terminal Box

The inside of the main terminal box must be free of dirt, moisture and foreign bodies. The box itself, the cable glands and unused cable entries must be sealed.

The main terminal box is attached to the top or side of the alternator. In the standard version three of the four terminals are used for the power outputs U1, V1 and W1; the fourth is used for forming the star point for the three ends of the windings U2, V2 and W2. In case of factory-fitted current transformers, a copper bar forms the fourth terminal (N).

A connection feature for low-voltage connections such as a control system, temperature sensor, heating or similar item is, depending on the size of the alternator, either on the bearing plate on the B end or in a separate auxiliary terminal box on the stator housing.

8.4.5 Auxiliary Terminal Boxes

Auxiliary terminal boxes are attached to the alternator to suit the additional equipment and customer needs; See the positions on the outline drawing.

The auxiliary terminal boxes are equipped with terminal blocks and cable glands. As standard, the maximum cross-section of the conductors must not exceed 1.5 mm² (0.0024sq. in.) and the voltage to 500 V. Existing cable glands are suitable for cables with a diameter of 10-16 mm (0.4 inch-0.6 inch).

 Copyright © 2026 Cummins Inc

8.4.6 Isolation Distances for the Primary Line Connections

The connections for the primary line cables must be designed in accordance with the operating conditions.

To ensure lasting, trouble-free operation, the isolation distances and the creep path distances must be adequately dimensioned. The minimum isolation distances and creep path distances must comply or exceed the requirements defined by:

- Local regulations
- Standards
- Classification regulations
- Hazard zone classification

8.4.7 Primary Line Cables

⚠ DANGER

Live Electrical Conductors

Live electrical conductors can cause serious injury or death by electric shock and burns. To prevent injury and before working on live conductors:

- ***Shut down and isolate the alternator from all energy sources.***
- ***Remove or isolate stored energy.***
- ***Test isolated parts for electrical isolation using a suitable voltage tester.***
- ***Use lock out/tag out safety procedures.***

⚠ WARNING

Incorrect Electrical Installation and System Protection

Incorrect electrical installation and / or system protection can cause serious injury or death by electric shock and burns. To prevent injury or death and before starting work, personnel:

- ***Have completed related, applicable and approved training.***
- ***Know the equipment, understand the task(s) and procedure(s).***
- ***Know related hazards / risks.***
- ***Know and obey site / location specific emergency procedures and applicable laws and regulations.***

⚠ WARNING

Grounding

Incorrectly grounded alternators can cause serious injury or death or serious equipment damage by electric shock or electrical malfunction. To avoid equipment damage, injury or death:

- ***The alternator must be permanently grounded, unless the application or applicable laws and regulations do not permit alternator grounding.***

The dimensions of the power cables must be designed for the rated current and comply with local standards. The cable terminating fittings must be of a suitable type and be of the correct size. Check the connections on all equipment.

Standard stator terminals are marked in accordance with IEC 60034-8 using the letters U, V and W. The neutral terminal is marked with N. Insulation stripping, connecting and insulating high-voltage cables must be done in accordance with the instructions from the cable manufacturer.

Fasten the cables so that the bus bar in the terminal box is not placed under mechanical load.

Compare the phase sequence with the circuit diagram and rating plate.

- Seal unused cable glands in the terminal box and alternator against the ingress of dust and moisture so they cannot loosen.
- Re-tighten all contact screws and nuts to the specified torque.
- If sudden loads or alternator vibration are to be expected, fasten cables using cable clips or cable racks.
- Make sure there is enough play at elastically mounted equipment.

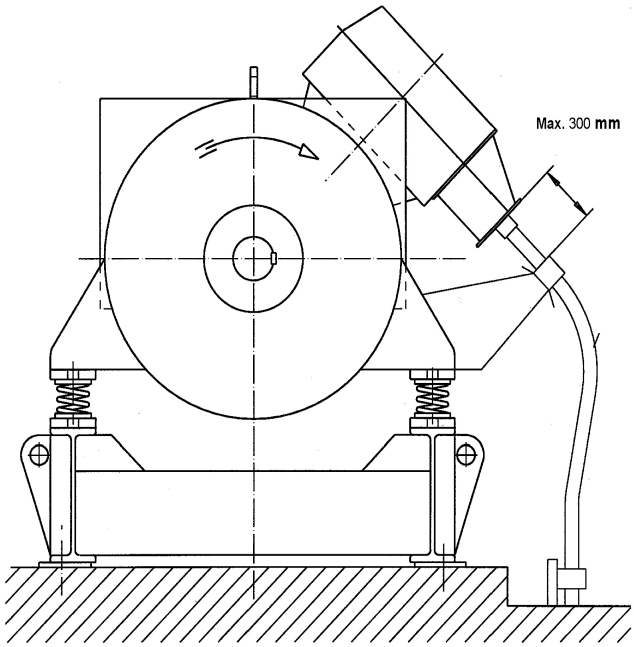

FIGURE 23. VIBRATION DAMPERS ON BASE FRAME. ENSURE FREE CABLE LENGTH.

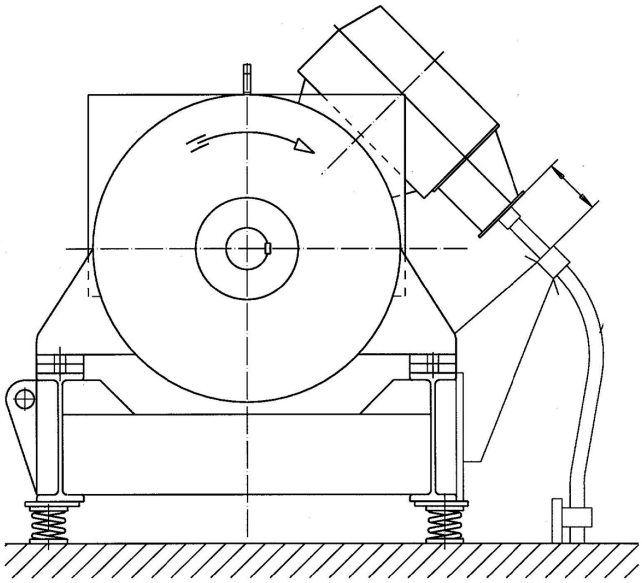

FIGURE 24. VIBRATION DAMPERS ON FOUNDATION. ENSURE FREE CABLE LENGTH.

8.4.7.1 Recommendation for Power Cable Connection to the Customer's System

- Connect the cables in accordance with DIN 46200

 Copyright © 2026 Cummins Inc

- Use approved screw locking elements for cable fastenings and only fit these to the connection on one side of the clamped conductor

The other side of the clamped conductor is reserved for carrying the electrical power. Only use washers or locking plates made of copper-zinc alloys (brass). Materials with equivalent electrical and mechanical properties are also allowed.

8.4.7.2 Recommendation for Bus Bar Connection to the Customer's System

- Bus bar connection in accordance with DIN 46200
- Use approved screw locking elements for the bus fastenings and only fit these to the connection on one side of the clamped conductor. The other side of the clamped conductor is reserved for carrying the electrical power, for this reason it is only allowed to use washers or locking plates made of copper-zinc alloys (brass).
- Materials with equivalent electrical and mechanical properties are also allowed.

Fasten the bus bar connections to the customer's system correctly to ensure reliable operation. Prevent vibration on the bars. If necessary, use additional supports and decoupling approved by the manufacturer. Provide the manufacturer with the related information during project planning.

8.4.7.3 Transducer Installation

Do not operate the alternator until any required transducer is installed.

8.4.7.4 Interference Suppression

For good interference suppression, pay attention to correct grounding with an appropriate protective ground conductor with the stipulated minimum conductor length.

8.4.7.5 Connection of Additional Equipment and Instruments

Mark the terminals of additional equipment if they are live while the alternator itself is switched off.

Connect the instruments and the additional equipment as per the circuit diagram.

Refer to the circuit diagram supplied with the alternator before connecting the cables. The connection and function of the additional equipment must be checked before commissioning.

8.4.7.5.1 Grounding Connections

Connect grounding according to local regulations before the alternator is connected to the supply voltage.

The alternator and related equipment must be connected to protective ground. The connections to protective ground must be able to protect the alternator against damaging or dangerous electrical potentials (voltage).

The manufacturer's liability does not cover damage as a consequence of incorrect grounding or incorrect cabling in the customer's installation.

8.5 Criteria that Affect the Output Power

8.5.1 Design Criteria

The following criteria are used during design:

- Coolant temperature
- Installation altitude
- Degree of protection
- Type of cooling
- Power factor
- Ship classification

8.5.2 Effect of Coolant Temperature

The alternators are designed to meet standards supporting EU Safety Directives, and are rated for the effect of operating temperature on winding insulation.

BS EN 60085 (≡ IEC 60085) Electrical insulation – Thermal Evaluation and Designation classifies insulation capability by the maximum operating temperature for a reasonable design and service life. When considering thermal design life, thermal conditioning of insulation system components and their combination are predominantly influenced by the level of thermal stress applied to the system. Additional, single or a combination of factors such as mechanical, electrical and environmental stress, may cause degradation over time, but these are considered secondary when considering thermal degradation of an insulation system.

If the operating environment differs from the values shown on the rating plate, rated output must be reduced by

- 3% for class H insulation for every 5 °C that the temperature of the ambient air entering the cooling fan exceeds 40 °C, up to a maximum of 60 °C
- 3.5% for class F insulation for every 5 °C that the temperature of the ambient air entering the cooling fan exceeds 40 °C, up to a maximum of 60 °C
- 4.5% for class B insulation for every 5 °C that the temperature of the ambient air entering the cooling fan exceeds 40 °C, up to a maximum of 60 °C
- 5% if air filters are fitted, due to restricted air flow.

Note: The values above are cumulative dependant on environmental conditions.

Efficient cooling depends on maintaining the condition of the cooling fan, air filters and gaskets.

8.5.3 Effect of Installation Altitude

If the operating environment differs from the values shown on the rating plate, rated output must be reduced by

- 3% for every 500 m increase in altitude above 1000 m, up to 4000 m***** , due to the reduced thermal capacity of lower density air.

***** The following changes to the insulation system of medium and high voltage alternators, must be applied to minimize the adverse effects of operating at higher altitudes, to ensure normal operational life expectancy. The changes are calculated in accordance to the specific alternator design and Pashen's Curve.

- Up to 1500 m elevation: No change to insulation system required
- 1500 - 3000 m elevation: Requires a change to the insulation system design to meet altitude operational requirements. Maximum system voltage (Un) designs up to 11 kV. This design upgrade is factory manufactured only.

 Copyright © 2026 Cummins Inc

- 3000 - 4000 m elevation: Requires a change to the insulation system design to meet altitude operational requirements. Maximum system voltage (Un) designs up to 6.6 kV. This design upgrade is factory manufactured only.

Note: For alternators with nominal design voltage above 1.1 kV, thermal derate due to the change in insulation system design to meet higher altitude operational conditions above 1000 MASL **cannot be assumed** based on standard derate factors. Advice must be obtained from Cummins Generator Technologies, as special considerations are required to allow for increased insulation systems thermal transfer capabilities.

8.5.4 Effect of Power Factor Cos Phi

The under-excited range from cos phi 0 to 1 is limited in case of:

- Individual operation due to the maintenance of the rated voltage by the voltage regulator.
- Operation in parallel with the line system due to stability against loss of synchronism.

The over-excited range is limited from:

- cos phi = 1 to the rated power factor by the output power of the prime mover
- cos phi = rated power factor to 0 by the permitted rotor heating

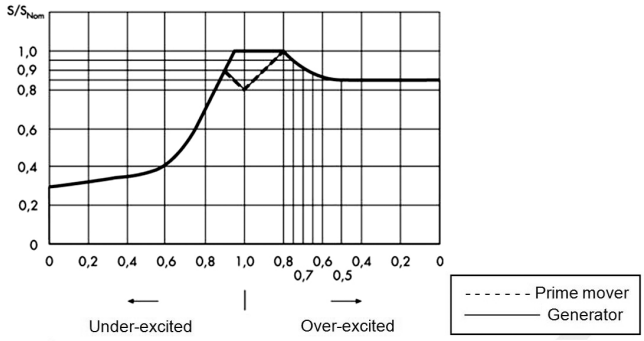

FIGURE 25. DEPENDENCY OF THE OUTPUT POWER ON THE POWER FACTOR

8.6 Electrical Behavior

8.6.1 Principle of Operation

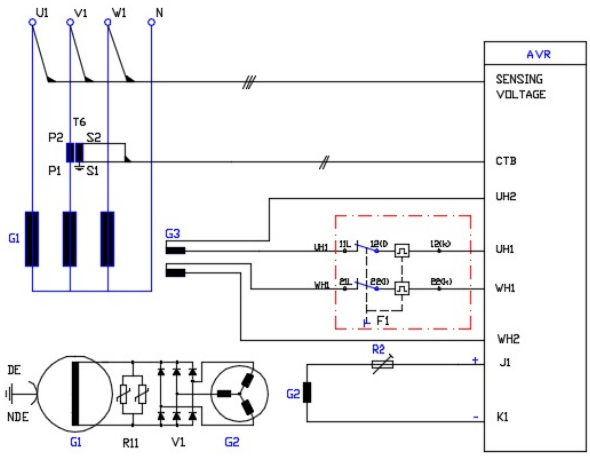

FIGURE 26. BLOCK DIAGRAM OF ALTERNATOR WITH AUXILIARY WINDING

TABLE 8. DIAGRAM COMPONENTS

G1	Main machine
G2	Exciter machine
G3	Auxiliary exciter windings
T6	T6 - Current transfomer for line B sensing input (Droop CT for AVR)
T25(only for 690V)	Voltage transformer(sensing voltage for AVR)
F1	Protection switch for G3
R2	Serial resistor

The auxiliary windings G3 supply the excitation stator of the brushless three-phase AC exciter G2 with power via the control element of the voltage regulator.

The voltage generated in the three-phase winding in the excitation rotor G2 is rectified in a 6 diode bridge circuit and fed to the rotor in the alternator G1.

The voltage of the primary alternator is adjusted by the voltage regulator by changing the excitation current in winding G2.

8.6.2 Voltage Regulator

The following voltage regulators can be installed in the alternator, depending on customer requirements:

- Basler DECS-100, 150, 250
- STAMFORD | AVK™ DM110
- ABB Unitrol 1000, 1010, 1020
    - It is also possible to procure the alternator without a voltage regulator.
    - The voltage regulator description is in the manufacturer's manual which is found in the customer documentation.

8.6.3 Self-excitation, De-excitation

8.6.3.1 Self-excitation

The following options are available:

- For alternators with auxiliary windings, self-excitation is provided by permanent magnets in the excitation machine.
- In special cases, excitation can also be initiated using an external voltage of approx. 10 VDC.

Do not switch on external excitation when the alternator is stationary.

 Copyright © 2026 Cummins Inc

8.6.3.2 De-excitation

⚠ DANGER

Live Electrical Conductors

Live electrical conductors can cause serious injury or death by electric shock and burns. To prevent injury and before working on live conductors:

- ***Shut down and isolate the alternator from all energy sources.***
- ***Remove or isolate stored energy.***
- ***Test isolated parts for electrical isolation using a suitable voltage tester.***
- ***Use lock out/tag out safety procedures.***

⚠ WARNING

Incorrect Electrical Installation and System Protection

Incorrect electrical installation and / or system protection can cause serious injury or death by electric shock and burns. To prevent injury or death and before starting work, personnel:

- ***Have completed related, applicable and approved training.***
- ***Know the equipment, understand the task(s) and procedure(s).***
- ***Know related hazards / risks.***
- ***Know and obey site / location specific emergency procedures and applicable laws and regulations.***

The interruption must always be made on the regulator supply side (see order-specific documentation). For de-excitation the current in winding J1K1 on the excitation machine G2 must be reduced to zero.

- Disconnect power supply to the regulator by removing the jumpers or using a switch as per the circuit diagram.
- The switch contacts must be designed for 10 A and 230 VAC.

Refer to the related circuit diagram. After de-excitation the alternator continues to generate a residual voltage of approx. 15% of U_N at the rated speed.

8.6.4 Voltage and Frequency

AvK offers alternators with a voltage to a maximum of 13,8 kV for 50 or 60 Hz.

The voltage and frequency range is defined in accordance with IEC/EN 60034-1 zone A or zone B.

See the rating plate and the technical specification for your specific alternator.

8.6.4.1 Voltage Adjustment Range

Depending on the voltage regulator used, the alternators can be supplied with set point control for installation in the switch panel.

8.6.4.2 Static Voltage Behavior

The voltage accuracy is ± 0.5% to ± 1% under the following conditions:

- No-load to nominal load cos phi 0.1 …1
- Cold and warm machine
- Speed drop of 3%

8.6.4.3 Transient Voltage Behavior

The voltage change on a sudden load fluctuation depends on the reactance voltage drop of the alternator G1.

The magnetic circuit and the winding are designed for low transient voltage changes.

External disturbance variables for the transient voltage change are:

- The relative current transient
- The power factor

With a basic load the transient voltage change is slightly lower than on the alternator with no load.

On the application of full load with cos phi 0.8 the transient voltage change is approx. 18 to 25%.

- Refer to the order-specific data sheet for the exact values.

The time constants of the alternator G1, the excitation machine G2 and the control system used, along with the dynamic speed drop as an external effect define the change in the voltage over time.

Up to the rated voltage, the excess excitation provided by the supply equipment is effective on switching in loads. As a result the generously dimensioned excitation system achieves short stabilization times.

This aspect affects the control properties.

The thermal design for continuous operation is for cos phi rated power factor. The normal operating range is from cos phi (rated power factor normally = 0.8) to cos phi=1.

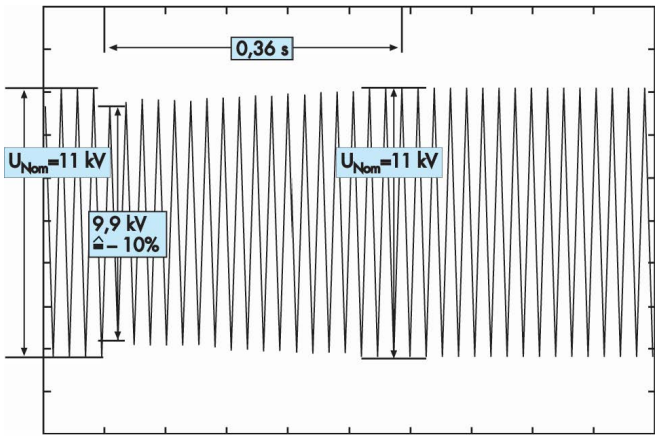

FIGURE 27. EXAMPLE OF AN ALTERNATOR DIG 150I/8; 3300 KVA; 11 KV; 50 HZ; 750 MIN-1 SWITCHING IN 1000 KVA; COS φ = 0.1

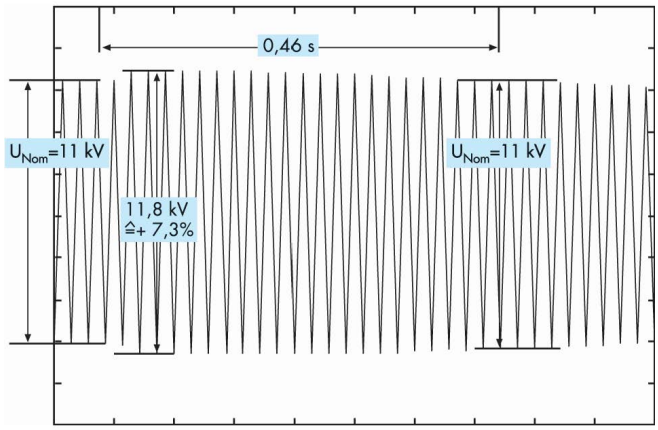

FIGURE 28. EXAMPLE OF AN ALTERNATOR DIG 150I/8; 3300 KVA; 11 KV; 50 HZ; 750 MIN-1 SHUTTING DOWN 1000 KVA; COS φ = 0.1

 Copyright © 2026 Cummins Inc

8.6.4.4 Voltage Waveform Shape

The design of the magnetic circuit, the stator winding, the rotor contour and the form of the air gap result in a sinusoidal voltage waveform.

The definitions for the evaluation of the waveform shape are:

- Telephone Harmonic Factor "THF"
- Total Harmonic Distortion "THD"

  Here the requirements as per IEC 60034 are reliably met.

8.6.5 Currents

8.6.5.1 Asymmetrical Loading

The electrical design of the alternator also permits asymmetrical loading.

For an asymmetrical load without loading on the other phases, the following are allowed as per IEC 60034-1.

1. I2/IN ≤ 8% continuous, where no stator current exceeds the rated current.
2. $(I2/IN)^2 * t \leq 20$ s for transient processes.

8.6.5.2 Overload

- The alternator is sized for 1.5 times rated current for 30 s duration.
- In line with the specifications for combustion engines, an overload of 1.1 times rated current for 1 hour is permitted once within 6 hours.
- The excitation system permits a brief overload up to 1.8 times rated current for approx. 10 s.

  This short-term overload capability is available, e.g. for starting currents for asynchronous motors.

8.6.5.3 Short-Circuit Behavior

The alternators are designed so that the transient voltage behavior is compliant with the requirements provided to the manufacturer. This behavior then defines the short-circuit behavior.

- Depending on the size of the alternator, the current decays to the sustained short circuit current within 0.3 to 0.6 s

The primary components are sized so that the alternator is able to supply 2.5-3 times the rated current for 5 s in case of a three-phase terminal short circuit.

- For a two-phase short circuit the sustained short circuit current is a factor of 1.4 to 1.7 times higher. In this way protective devices for the reliable selective isolation of the line system can be allocated.

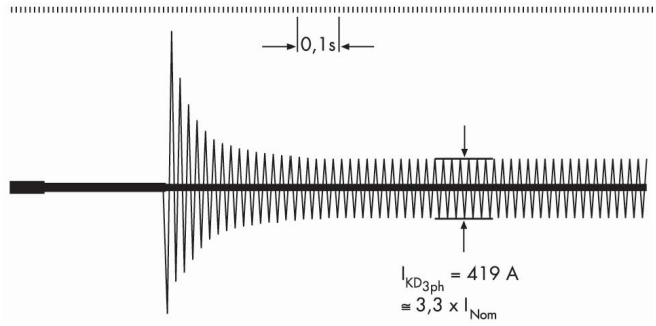

FIGURE 29. INSTANTANEOUS SHORT CIRCUIT CURRENT

8.6.5.4 Harmonic Load

Loads with non-linear load currents (e.g. rectifiers) cause harmonics on the voltage waveform.

The total harmonic distortion on the voltage waveform must be kept as low as possible to reduce the losses that occur as a result in the alternator and in the system, and to ensure the correct function of the electrical equipment connected.

8.6.5.5 Standby Regulator

For increased reliability if the electronic voltage regulator fails, it is possible to manually or automatically switch the alternator using a standby regulator.

The entire regulator unit, including:

1. Main regulator
2. Standby regulator
3. Manual or automatic change-over circuits must be installed in the switchgear.

8.6.5.6 Star Point Treatment of Neutral Conductor Current

Alternators can be operated with a solidly grounded star point or with an ungrounded star point. The type of star point grounding is defined by the protection concept and not by the alternator.

Different possibilities for star point grounding (neutral conductor grounding):

- Low impedance (solid) grounding
- High impedance grounding
- Ungrounded star point

NOTICE
A double ground fault behaves in all circumstances like a short circuit.

8.6.5.6.1 Low Impedance (Solid) Grounding

Differential protection for fast detection is stipulated. On grounding several star points high equalization currents occur due to harmonics; these currents place high thermal loads on the windings and above all on the neutral conductor.

- To reduce these currents, neutral conductor chokes are required.

Very high currents can occur for an earth fault on a phase.

- The high earth fault currents cause burning in the core and damage to the alternator winding.

 Copyright © 2026 Cummins Inc

8.6.5.6.2 High Impedance Grounding

In case of high impedance grounding the fault current is limited by an appropriately dimensioned neutral conductor grounding resistor. The maximum possible ground current is to be limited to 5 A by grounding resistors. As neutral conductor grounding resistors are mostly designed for brief operation, selective protective devices must be provided.

In the worst case the winding insulation in the alternator is loaded with a voltage to ground increased by the factor √3. Do not sustain a fault current longer than 2 hours, or accelerated aging of the winding insulation will occur.

8.6.5.6.3 Ungrounded Star Points

In case of a ground fault in ungrounded line systems a fault current does not occur.

The winding insulation in the alternator is the loaded with a voltage to ground higher by the factor √3.

Do not sustain a fault current longer than 2 hours, or accelerated aging of the winding insulation will occur.

If the alternator is to be operated in these conditions for an extended period, the winding must be designed with a higher insulation class.

8.7 Parallel Operation

8.7.1 General

The parallel operation of the required number of units enables good efficiency and optimal utilization.

The reliability is increased. In case of a failure of one unit and appropriate configuration, the other units can take over the output power.

8.7.2 Parallel Switching Conditions

The alternators to be switched in parallel and line system must comply with the synchronization conditions, i.e. the alternators must be the same in relation to the following criteria:

1. Voltage
2. Frequency
3. Phase sequence
4. Phase position

Permissible tolerances before connecting are:

1. Voltage difference taking into account the phase position: maximum 2% of U_N
2. Frequency difference: maximum 0.6% of f_N

To avoid incorrect synchronization, a synchronization control unit in the switch panel should only enable the circuit breaker once the synchronization conditions described are met. After switching in parallel the effective and reactive load distribution must be balanced.

8.7.3 Island Parallel Operation

- The prime movers define the effective load distribution.
- The voltage behavior of the alternators defines the reactive load distribution.

The following methods of reactive load distribution are to be used:

1. Voltage droop
2. Power factor regulation

8.7.3.1 Voltage Droop

Terminal voltage is reduced as a function of the reactive current.

The distribution of the reactive load proportional to the rated output power of the alternators requires the same voltage droop.

- For adjustment to other makes the voltage droop can be continuously adjusted from 0% to a maximum of 6% of the nominal voltage.
- For stable parallel operation the voltage droop is set in the factory to 3% at nominal current and cos phi 0.1.

This basic setting results in the following voltage droop curve:

TABLE 9. VOLTAGE DROOP

0%	at cos phi = 1
1.3%	at cos phi = 0.9
1.8%	at cos phi = 0.8
3%	at cos phi = 0.1

8.7.4 Operation in Parallel with the Line System

As the line system has a much higher short circuit power than the alternators in the majority of cases, the number of units operating in parallel is irrelevant. As a result there is no significant effect as a result of this configuration.

Voltage fluctuations emanate largely from the line system.

In case of operation in parallel with the line system a power factor regulator is to be used.

As a result the power factor set remains constant in case of line voltage fluctuations as well as with varying alternator loads.

If a specific power factor is required at the line transition point, the current transformer for the power factor regulator must be arranged at this point.

8.7.4.1 Power Factor Regulation

This process is used for operation in parallel with the line system.

- For digital voltage regulators (e.g. DECS, Unitrol) the power factor regulator is integrated.

As a result, the alternator current has also to be monitored at the alternator terminals as a function of the power factor.

 Copyright © 2026 Cummins Inc

This page is intentionally blank.

9 Commissioning and Starting

9.1 General

The commissioning report is an important document for future servicing and maintenance of the alternator as well as any troubleshooting. Commissioning can only be considered complete once an adequate commissioning report has been prepared and archived.

It is imperative that the commissioning report is submitted on making claims under the warranty.

9.2 Check the Mechanical Installation

1. Before commissioning check the alignment of the alternator.
2. Review the alignment report and make sure that the alternator is aligned in accordance with the manufacturer's alignment specification (see **Section 7.4 on page 48**)
3. The alignment report must always be included with the commissioning report. Make sure the alternator is correctly anchored on the foundation.
4. Check the foundation for cracks and its general condition.
5. Make sure the fastening screws are tightened to the correct torque.
6. Check the direction of rotation of the alternator, looking at the alternator shaft DE.
7. Make sure the lubrication system is operational and running before the rotor is turned.
8. On alternators with anti-friction bearings turn the rotor by hand (before the alternator has been coupled) and make sure it rotates freely and no abnormalities, e.g. scraping or grating noises can be heard.
9. Check the installation of the main terminal box and the cooling system.
10. Check the ambient conditions and the function of the cooling system.
11. Check the connections for the oil and cooling water lines and check them for leaks during operation.
12. Check the pressure and the flow of oil.
13. Check the pressure and the flow of cooling water.

9.3 Check the Electrical Installation

Before the alternator is started for the first time, after an extended period at standstill or during general servicing work, measure the insulation resistance, see **Section 8.4.3 on page 58**.

9.4 Controller and Protective Equipment

9.4.1 General

If the alternator shuts down or in the event of an alarm, the reason must be found and corrected before re-starting the alternator. The alternator is equipped with several resistive temperature sensors (PT100/PT1000) in order to avoid overheating of the alternator. These sensors must be connected to a temperature monitoring and protection system.

The temperature alarm level for resistive temperature sensors must be set as low as possible. The level can be determined based on test results or the operating temperature measured. The temperature alarm can be set 5 - 10 K (11 - 20 °F) higher than the operating temperature of the alternator with maximum load at the highest possible ambient temperature.

 Copyright © 2026 Cummins Inc

If a temperature monitoring system with two functions is used, the lower level is normally used as the alarm level and the higher level as the shutdown level.

9.4.2 Stator Winding Temperature

Standard stator windings are manufactured in accordance with temperature rise class H for all LV alternator types. See **Table 10** for maximum settings.

A high temperature will result in the insulation aging more quickly and shortening the service life of the windings. Take this into account when defining the limits for alarm triggering and thermal shut down.

9.4.3 Maximum Temperature Setting

Carefully consider the application environment when setting the shutdown values during commissioning. After a test run at nominal load for approx. 3-4 hours, the temperature sensors must be set approx. 5 K above the values measured. During this process make sure that the maximum possible cooling air temperature is taken into account.

This statement applies in particular to the temperature monitoring for the anti-friction bearings/sleeve bearings, as a temperature increase is normally indicative of a bearing damage. Warning and shut down levels must be set close to the nominal temperature.

Do not exceed the temperatures stated in **Table 10 on page 74**.

9.4.4 Maximum Settings for the Stator Temperature

TABLE 10. WARNING TEMPERATURES AND SHUTDOWN TEMPERATURES FOR STATORS

Insulation class	Warning °C	Shutdown °C
Heating to B	125	130
Heating to F	140	145
Heating to H	155	160

9.4.5 Monitoring the Bearing Temperature

9.4.5.1 General

The bearings can be equipped with temperature sensors to monitor the bearing temperatures. The viscosity of the grease or oil used reduces at a higher temperature. If the viscosity becomes too low, it is no longer possible to form a film of lubricant in the bearing and the bearing will be damaged which in turn will damage the shaft.

If the alternator is equipped with resistive temperature sensors, monitor the temperature of the bearings continuously. If the temperature of a bearing starts to increase unexpectedly, the alternator must be shut down immediately, as the temperature increase may be indicative of a bearing failure.

9.4.5.2 Maximum Temperature Settings for Bearings for all types apart from DIG142

If not stated otherwise on the outline drawing, the following warning and shutdown limits apply.

TABLE 11. WARNING TEMPERATURES AND SHUTDOWN TEMPERATURES FOR BEARINGS

Bearing class	Warning °C	Shutdown °C
Anti-friction bearings	75	90
Anti-friction bearings for alternators **ordered** for a rated ambient temperature >= 55°C	85	90

Bearing class	Warning °C	Shutdown °C
Sleeve bearings	85	90

9.4.5.3 Maximum Temperature Settings for Bearings for DIG142

If not stated otherwise on the outline drawing, the following warning and shutdown limits apply.

TABLE 12. WARNING TEMPERATURES AND SHUTDOWN TEMPERATURES FOR BEARINGS FOR DIG142

Bearing class	Warning °C	Shutdown °C
Anti-friction bearings	85	90
Sleeve Bearings	-	-

9.4.5.4 Protective Systems

The alternator must be protected against malfunctions, failures and overloads that could damage the alternator. The protection must comply with the requirements and regulations in the specific country in which the alternator is used. The manufacturer of the alternator is not responsible for the adjustment of the protective systems.

9.5 First Run

9.5.1 General

The first test start is a standard procedure after installation and alignment, making mechanical and electrical connections, commissioning and activation of protective systems. The first start must be made without load.

9.5.2 Before Starting

Before the first test start the alternator and its equipment are visually inspected. Make sure that all the necessary work, checks and settings have been made.

Before the first test start the following checks and measures prior are to be made:

1. Check the coupling and the coupling guard for correct assembly and loose parts.
2. Check that any fitted grounding brushes are free to move and are in contact with the shaft.
3. The sleeve bearings and, if required, the oil supply system must have been filled with the stipulated oil to the correct level. Then switch on the oil supply system, if necessary.
4. In case of water-cooled alternators, place in operation the water cooling circuit. Check the flanges and cooling unit for leaks.
5. Compare the wiring and the bus bar connections with the circuit diagram.
6. Check grounding connections and grounding systems.
7. Check start, stop, protective and alarm relays in each system.
8. Check the insulation resistance of the windings and other equipment.
9. Fit the covers to the alternator.
10. Clean alternator and surrounding area.
11. Check that no loose parts (bolts etc.) are in the terminal box. If so, these must be removed.
12. Check the fan rotation direction.
13. Check the rotating parts do not touch any fixed components.

 Copyright © 2026 Cummins Inc

9.5.3 Starting

First check the direction of rotation of the alternator on starting for the first time. If external fan motors are installed, check the direction of rotation. Check that the rotating parts do not touch any fixed components.

If the alternator does not have a fixed bearing and the alternator is started with a flexible coupling, it is normal for the shaft to move axially before it stabilizes. If installed, check the adjustment indicator and correct the alignment in case of errors (see **Section 7.4 on page 48**).

9.5.4 Direction of Rotation of the Alternator and External Motors

The alternator must be operated with the direction of rotation stated on the rating plate.

Check the direction of rotation of the alternator based on the outline drawing.

Check the direction of rotation of any external motors installed (pumps, fans etc.). The direction of rotation is given by an arrow near the motor.

9.5.5 Ground Fault Monitoring

- Check the function of the ground fault monitoring.
- If the alternator has a brush lifting device, check its position and function. Refer to **Section 11.7.6.1 on page 112**.

9.6 Operate the Alternator for the First Time

9.6.1 Monitoring during Operation

During operation for the first time check whether the alternator is functioning correctly. Constantly monitor the amount of vibration, the temperature of the windings, bearings and regulators.

- Check the operating load on the alternator by comparing the load current with the value stated on the alternator rating plate.

9.6.1.1 Check the Excitation

1. Check voltage rise during automatic operation.
2. Check regulation range of the automatic voltage regulation.
3. Check regulation range of the voltage with manual excitation.
4. Check switching from voltage regulation to current regulation with manual excitation.

9.6.1.2 Check the Synchronization Chain

The synchronization check is made in 2 stages.

1st stage:

The two measuring circuits in the synchronization chain are supplied from the same source. Check the following points:

1. The zero point for the synchronoscope
2. The zero indication on the differential voltmeter
3. The frequency meter

2nd stage:

One measuring transformers is supplied from the alternator and the other from the line system to compare the related rotating fields.

9.6.1.3 Full Load Test

After stabilization, the following must be measured:

1. Stator winding
2. Cold air - warm air
3. Bearing on coupling end AS (DE)
4. Bearing on opposite end to the coupling BS (NDE)
5. Vibration measurement on the alternator bearings (see Section 6.7 on page 38).

9.6.1.4 High-speed De-excitation

High-speed de-excitation is only necessary in case of certain malfunctions. For example, false synchronisation or if the alternator is suddenly separated from the mains.

De-excitation switches are not included in the items supplied.

9.7 Check the Alternator in Operation

During the initial days of operation, it is important to monitor the alternator carefully for changes in vibration, temperature or abnormal noises.

9.7.1 Bearings

9.7.1.1 Alternators with Anti-friction Bearings

- Do not re-grease the alternator during commissioning.
- If the alternator has been protected against corrosion, remove the corrosion protection before starting for the first time.

The type of grease used originally is stated on the rating plate on the alternator. Refer to the allowed grease types in Section 11.5.2.4 on page 101, types of greases.

The temperature of the bearings increases at the start due to excess grease. After a few hours the excess grease is driven out and the temperature of the bearing drops to the normal operating level. See Section 11.5.2.4 on page 101

Adhere strictly to the re-lubrication interval. The interval between two lubrication intervals must not exceed 12 months under any circumstances. After the alternator has been operated for several hours, measure the vibration and record the values for subsequent reference.

9.7.1.2 Alternators with Sleeve Bearings

Make sure that no rotating parts rub on fixed parts. For self-lubricating bearings, check the oil level in the oil sight glass at standstill and at ambient temperature. It must be in the area from one third to half of the oil sight glass (see Figure 31 on page 98).

Continuously check the temperature and oil level in the bearings at the start. This is particularly important with self-lubricating bearings. If the temperature of the bearing suddenly increases, the alternator must be stopped immediately and the cause of the temperature increase corrected, before the alternator is started again. If no logical reason is found using the measuring equipment, open the bearings and check their state.

During the warranty period the manufacturer is always to be informed before measures are taken.

For self-lubricating bearings, check the rotation of the oil lubrication ring through the inspection window on the top of the bearing. If the oil lubrication ring is not rotating, stop the alternator immediately to avoid bearing damage.

In case of alternators with external lubrication, the oil supply is provided by external units. See documentation on the oil supply.

 Copyright © 2026 Cummins Inc

The use of higher supply pressures and increased flow rates will not provide any advantage and may result in leaks. The viscosity of the oil, the flow rates and the maximum oil inlet temperature are stated on the outline drawing.

The lubrication system must be designed so that the pressure in the bearing corresponds to atmospheric pressure (external pressure). Air pressure that enters the bearing via inlet or outlet pipes will result in oil leaks.

9.7.2 Temperature Level

Check the temperatures of the bearings, stator windings and cooling air with the alternator running. (See **Section 9.4.3 on page 74**)

The winding and bearing temperatures only reach a stable temperature after several hours at maximum load.

The temperature of the stator winding depends on the load on the alternator. If it is not possible to achieve full load during or just after commissioning, the actual and temperature values must be recorded and noted in the commissioning report.

1. Record the temperatures at the temperature sensors for the windings and if necessary for the bearings.
2. Check the temperature frequently to ensure it remains below the limits.
3. Continous temperature monitoring is required.

9.7.3 Heat Exchanger

- Before starting, make sure the connections are secure and there are no leaks in the system.

After the alternator has run for a time it is necessary to check the cooling system.

- Make sure the coolant and, if necessary, the air can circulate without hindrance.

9.8 Shut Down the Alternator

⚠ DANGER

Live Electrical Conductors

Live electrical conductors can cause serious injury or death by electric shock and burns. To prevent injury and before working on live conductors:

- ***Shut down and isolate the alternator from all energy sources.***
- ***Remove or isolate stored energy.***
- ***Test isolated parts for electrical isolation using a suitable voltage tester.***
- ***Use lock out/tag out safety procedures.***

The procedure to shut down the alternator depends on the application. Before commissioning clarify the concept for the shutdown procedure with the manufacturer of the drive unit and the switchgear.

However, it is recommended to:

1. Reduce, if necessary, the load in the load system.
2. Disconnect the alternator from the line system.
3. Make sure there is no condensation in the alternator.
4. Switch on any anti-condensation heaters, if these are not switched automatically by the switchgear.
5. For water-cooled alternators, interrupt the flow of cooling water to prevent condensation inside the alternator.

10 Operation

10.1 General

⚠ WARNING

Hot Surfaces and Fire

Contact with hot surfaces can cause serious injury and death by burns. A risk of fire exists where hot surfaces are contacted by combustible items. To prevent injury, death or risk of fire:

- ***Avoid contact with hot surfaces.***
- ***Always wear the appropriate personal protection equipment, refer to: Safety Precaution Chapter.***
- ***Make sure combustible materials or flammable substances are not stored close to or contact the anti-condensation heater (if fitted).***
- ***Make sure combustible materials or flammable substances are not stored close to the alternator or prime mover, including the ventilation and exhaust system(s) where applicable.***

Before starting the alternator, ensure the following:

1. Check the sleeve bearings for the correct oil and oil level according to the technical data and the outline drawing
2. All cooling systems are operating
3. Check the alternator and all attachments for leaks, soiling or damage
4. Check that there is no servicing work in progress
5. The operators and the system are ready for the machine start.

In case of deviations from the normal operating state, e.g. raised temperatures, noise or vibration, shut down the alternator and find the cause. If in doubt, contact the manufacturer.

10.2 Normal Operating Conditions

The alternator is designed for operation in normal operating conditions according to the order specification and manufacturer's internal regulations.

10.3 Number of Starts

The number of starts and shutdown processes in succession depends on the design of the alternator. If in doubt, contact the manufacturer for this information.

Use a counter to check the number of starts. The servicing intervals are based on the related operating hours, see **Chapter 11 on page 83**.

10.4 Monitoring

Check the alternator at regular intervals. Abnormal operating conditions must be investigated.

The objective of monitoring inspection is to make operating personnel familiar with the system. This aspect is very important for the timely identification and rectification of deviations and malfunctions. Normal operational monitoring includes logging the operating data such as load, temperatures and vibration.This data form a useful basis for servicing and maintenance.

 Copyright © 2026 Cummins Inc

During the initial operating period (up to 200 hours) monitor the alternator particularly intensively. Check the temperature of the bearings and windings, the load, the current, the cooling, the lubrication and vibration several times a day.

In the subsequent weeks and months (200-1000 hours) a daily check is sufficient. Record the results of the check in the inspection report and archive it at the operating organization. Subsequently, the interval between the inspections can be further extended if operation is continuous and stable.

10.4.1 Bearings

Monitor bearing temperatures (see **Section 9.4.5 on page 74**) and lubrication (see **Section 11.5 on page 97**).

10.4.2 Vibration

Monitor the vibration level in the alternator. See **Section 6.7 on page 38**.

10.4.3 Stator Temperatures

Check the temperatures of the stator windings and cooling air with the alternator running. (See **Section 9.4.2 on page 74**)

10.4.4 Heat Exchangers

Make sure the connections are secure and there are no leaks in the system. Make sure the coolant and, if necessary, the air can circulate freely. (See **Section 11.8.3 on page 114**).

10.4.5 Slip Ring Units

Monitor the wear on the carbon brushes and replace them before the wear limit is reached. (See **Section 11.7.6 on page 111**).

10.4.6 Documentation of Operation

The documentation of operation includes logging the operating data including the load, temperatures and vibration. This data form a useful basis for servicing and maintenance.

10.5 Shutting Down

⚠ DANGER

Live Electrical Conductors

Live electrical conductors can cause serious injury or death by electric shock and burns. To prevent injury and before working on live conductors:

- ***Shut down and isolate the alternator from all energy sources.***
- ***Remove or isolate stored energy.***
- ***Test isolated parts for electrical isolation using a suitable voltage tester.***
- ***Use lock out/tag out safety procedures.***

The procedure to shut down the alternator depends on the application. Before commissioning clarify the concept for the shutdown procedure with the manufacturer of the drive unit and the switchgear.

However, it is recommended to:

1. Reduce, if necessary, the load in the load system.
2. Disconnect the alternator from the line system.
3. Make sure there is no condensation in the alternator.

4. Switch on any anti-condensation heaters, if these are not switched automatically by the switchgear.
5. For water-cooled alternators, interrupt the flow of cooling water to prevent condensation inside the alternator.

10.6 Flashover Pressure Protection

NOTICE
If a flashover pressure event occurs in the terminal box, it is imperative that the entire alternator is inspected without delay.

It is not sufficient to simply renew the flashover protection. A protective system for pressure relief is installed in Cummins alternators; this system limits the extent of damage due to an event in the terminal box. A pressure event can occur if a fault causes flashover in the terminal box. During this process air and other materials suddenly expand to several times their initial volume due to the extremely high temperature.

Flashover protection attempts to reduce the pressure caused by this reaction in a defined manner using predetermined breaking points so that the effects of the event can be minimized. The objective is to exclude a hazard for personnel.

For this purpose a predefined breaking point for pressure relief is integrated into the sleeve on the terminal box. This feature consists of four individual plates that are arranged to form a square plate, or a metal film. The flashover protection is mounted pointing towards the alternator to prevent harm to any person nearby and to minimize any debris thrown out.

The flashover protection must be sealed so that the required degree of protection is achieved, but the pressure relief function is not affected.

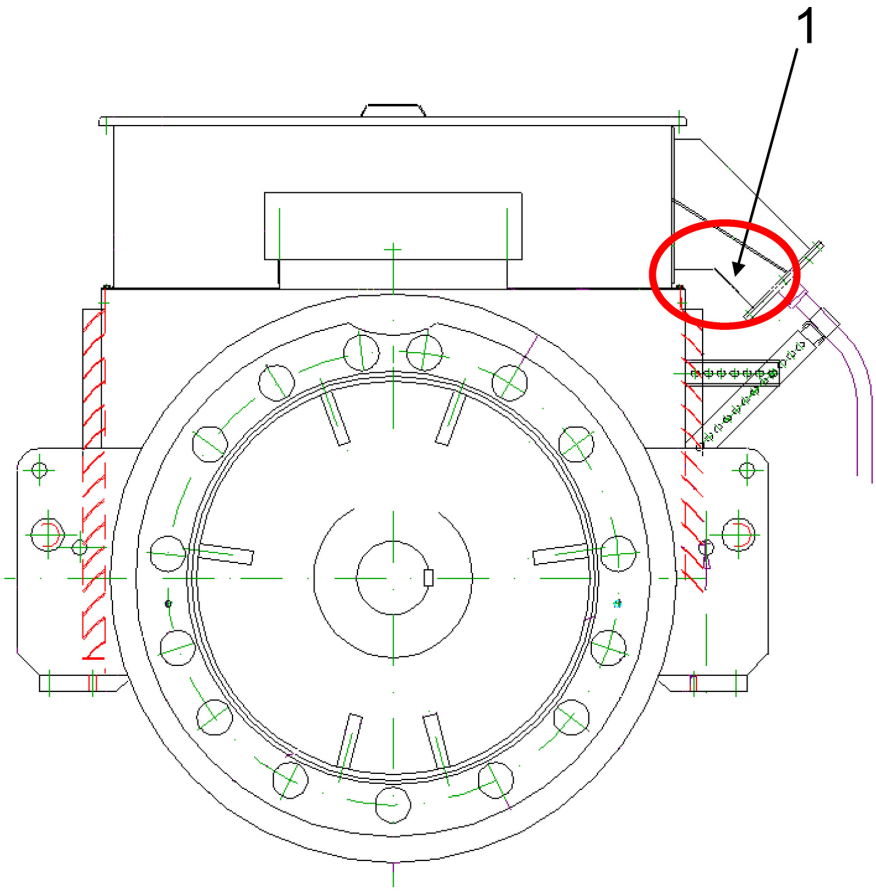

FIGURE 30. PROTECTION DEVICE (1)

 Copyright © 2026 Cummins Inc

This page is intentionally blank.

11 Service and Maintenance

11.1 Preventive Servicing

An alternator is often an important element of a larger installation.

If the alternator is correctly monitored and serviced, the alternator will function correctly and reliably for a long time.

The purpose of the servicing is therefore:

- To ensure that the alternator operates reliably and without anomalies or interruptions
- To be able to plan the necessary maintenance work in advance to minimize the downtimes.

The normal monitoring during operation includes the recording of operating data, e.g. load, temperature and vibration, as well as checking for correct lubrication and measuring the insulation resistances.

During the first days and weeks after commissioning or undertaking maintenance measures, the alternator must be monitored intensively. The temperature of the bearings and windings, the load, the current, the cooling, the lubrication and vibration are to be checked regularly.

This section contains recommendations in relation to a servicing schedule as well as instructions for normal servicing tasks. These instructions and recommendations are to be read carefully and used as the basis during the planning of the servicing schedule. The servicing recommendations stated in this section represent a minimum. More intensive maintenance and monitoring will increase the reliability and service life of the alternator. The servicing should be intensified if there are local conditions with high requirements or extreme reliability is required. Contact AvK® customer service for additional information.

The data recorded during the monitoring and servicing will make it easier to foresee and plan further measures. If you detect anomalies, the instructions in troubleshooting will assist you in the location of the causes.

We recommend the use of checklists (in the Customer Documentation) for the preparation of servicing schedules.

A key element of the preventive servicing is the availability of a selection of suitable service parts. To be able to have quick access to crucial service parts in case of need, you should keep a basic range in stock.

11.2 Safety Precautions

⚠ DANGER

Rotating Mechanical Parts

Rotating mechanical parts can cause serious injury or death by crushing, severing or trapping. To prevent injury:

- ***Before operating the alternator: The rotating coupling between the alternator and prime mover must be covered by a guard or cover.***
- ***Before attempting service or maintenance tasks or removing covers from rotating parts: Shut down and isolate the generator set from all energy sources, isolate stored energy and use lock out/tag out safety procedures.***

 Copyright © 2026 Cummins Inc

⚠ DANGER

Live Electrical Conductors

Live electrical conductors can cause serious injury or death by electric shock and burns. To prevent injury and before working on live conductors:

- ***Shut down and isolate the alternator from all energy sources.***
- ***Remove or isolate stored energy.***
- ***Test isolated parts for electrical isolation using a suitable voltage tester.***
- ***Use lock out/tag out safety procedures.***

⚠ WARNING

Incorrect Electrical Installation and System Protection

Incorrect electrical installation and / or system protection can cause serious injury or death by electric shock and burns. To prevent injury or death and before starting work, personnel:

- ***Have completed related, applicable and approved training.***
- ***Know the equipment, understand the task(s) and procedure(s).***
- ***Know related hazards / risks.***
- ***Know and obey site / location specific emergency procedures and applicable laws and regulations.***

⚠ WARNING

Reconnected Energy Source

Accidental reconnection of energy sources during service and maintenance work can cause serious injury or death by electric shock, burns, crushing, severing or trapping. To prevent injury and before starting any service and maintenance work:

- ***Isolate the alternator from energy sources.***
- ***Prevent alternator use with lock out/tag out safety procedures.***
- ***Do not defeat or bypass the lock out/tag out safety procedures.***

⚠ WARNING

Removing Safety Covers

A hazard exists when alternator safety covers are removed. Ejected debris and particles can cause serious injury or death by impact, severing or puncturing. Exposure to mechanically driven release of debris and particles exists in all directions (horizontally and vertically) where covers are removed. To prevent injury or death:

- ***Fit the safety labels at the locations shown on the back of the label sheet supplied.***
- ***Observe the safety labels.***
- ***Refer to the service manual before removing covers.***

⚠ CAUTION

Hazardous Substances

Hazardous substances can cause minor or moderate injury. Prolonged or repetitive exposure to hazardous substances can cause serious medical conditions. To prevent injury:

- ***Always read and obey the instructions provided by the product manufacturer.***
- ***Use, handle and store substances as specified by the product manufacturer.***
- ***Always wear appropriate personal protective equipment, refer to Safety Precautions Chapter.***

11.3 Recommended Servicing Schedule

Servicing should be intensified if there are local conditions with extreme requirements or extreme reliability is required. It is also highlighted that even on following this servicing schedule, the normal monitoring and observation of the state of the alternator are required.

The servicing schedule below, accessory parts may be mentioned that are not present on all alternators.

The servicing schedule is based on four servicing intervals; the related intervals are dependent on the operating hours. The amount of effort required and the downtime vary:

Servicing interval 8000 operating hours

This servicing interval includes visual inspections and minor servicing work. The purpose of the servicing is to check whether problems are developing before they result in failures and unplanned interruptions for servicing. The service inspection also identifies further measures.

The servicing is dependent on the type and the installation of the alternator as well as the feasibility of undertaking the inspection. The tools for this servicing work are normal servicing tools.

The servicing is to be done after an interval of 8,000 equivalent operating hours or one year after commissioning or servicing at the latest.

Servicing interval 20000 operating hours

Anti-friction bearings are to be replaced at 20,000 operating hour intervals, or every 3 years, whichever occurs first.

A visual inspection of the stator slot wedges is also to be conducted every 20,000 operating hours, or 3 years, whichever occurs first.

For specific details on how to conduct the stator slot wedge inspection contact your Regional CGT Customer Support team.

Servicing interval 25000 operating hours

This servicing interval can require the removal of alternator components. The purpose of this servicing is to check inaccessible components to safeguard long-term operation.

The servicing is dependent on the type and the installation of the alternator as well as the feasibility of undertaking the inspection. The tools for this servicing include special servicing tools.

The servicing is to be done after an interval of 25,000 equivalent operating hours or three years after commissioning or servicing at the latest.

Servicing interval 50000 operating hours

This servicing interval can require the removal of alternator components. The purpose of this servicing is to check inaccessible components to safeguard long-term operation.

The servicing is dependent on the type and the installation of the alternator as well as the feasibility of undertaking the inspection. The tools for this servicing include special servicing tools.

The servicing is to be done after an interval of 50000 equivalent operating hours or 6 years after commissioning at the latest.

 Copyright © 2026 Cummins Inc

Servicing interval 100000 operating hours

This servicing interval requires a complete alternator overhaul.

The purpose of this servicing is to equip the alternator for continued long-term operation.

The servicing is dependent on the type and the installation of the alternator. The servicing can only be done by appropriately qualified personnel.

The servicing is to be done after an interval of 100000 equivalent operating hours after commissioning.

11.3.1 Alternator

TABLE 13. ALTERNATOR MAINTENANCE

	SERVICING WORK		TYPE					Servicing Intervals				
System	X = required * = if necessary O= see rating plate/documentation	Alternator in operation	Visual inspection	Test and Measure	Clean	Repair or Replace	During Commissioning	Every 8,000 hours or 1 year	Every 20,000 hours or 3 years	Every 25,000 hours or 3 years	50,000 hours or 6 years	100,000 hours
General	Machine operation - Starting, shutting down, vibration measurement	*	X	X	*		X	X				
	General overhaul					*						X
	Coupling and foundation - Specially cracks, rust, alignment	*	X	X			X	X				
	Paint finish - Rust, condition		X		X		X			X		
	Screw joints - Strength of all screw joints		X	X			X	X				
	Foundation screws - Fastening, condition		X	X			X	X				
	Grounding - Connection, function		X	X			X	X				
	Vibration	X		X			X	X				

11.3.2 Main Electrical Connections

TABLE 14. ELECTRICAL MAINTENANCE

	Servicing Work		Type					Servicing Intervals				
System	X = required * = if necessary O= see rating plate/documentation	Alternator in Operation	Visual Inspection	Test and Measure	Clean	Repair or Replace	During Commissioning	Every 8,000 hours or 1 year	Every 20,000 hours or 3 years	Every 25,000 hours or 3 years	50,000 hours or 6 years	100,000 hours
Main Electrical Connections	Main electrical cables - Wear, fastening		X	X			X	X				
	Main electrical cables - Oxidation, fastening, cracks, screw joints		X	X			X	X				
	Main electrical connections - Insulation, resistance		X	X			X	X				
	Main electrical cables - Strain relief		X	X			X	X				
	Regulator - Function	X		X			X	X				
	Current transformers, voltage transformers, isolators - General condition, fastening, connections		X	X			X	X				
	Cable routes - Condition of the cables to the alternator and in the alternator		X	X			X	X				

 Copyright © 2026 Cummins Inc

11.3.3 Stator and Rotor

TABLE 15. STATOR AND ROTOR MAINTENANCE

	Servicing Work		Type					Servicing Interval				
System	**X = required * = if necessary O= see rating plate/documentation**	**Alternator in Operation**	**Visual Inspection**	**Test and Measure**	**Clean**	**Repair or Replace**	**During Commissioning**	**Every 8,000 hours or 1 year**	**Every 20,000 hours or 3 years**	**Every 25,000 hours or 3 years**	**50,000 hours or 6 years**	**100,000 hours**
Stator and Rotor	Stator - Fastening, cracks, weld seams		X				X	X				
	Insulation resistance of the stator and rotor winding - Wear, cleanliness, insulation resistance. **Disconnect the varistors while measuring the insulation resistance of rotor winding**		X	X	*		X	X				
	Stator winding assembly - Damage to insulation		X		*		X	X				
	Exciter stator - Rotor insulation Resistance			X			X	X				
	Rectifier carrier **-** Fastening, cable, diodes, varistors, resistors		X	X	*		X	X				
	Auxiliary windings - Resistance measurement			X			X	X				
	Stator slot wedges - Movement; firm seating		X						X			
	Stator terminals **-** Fastening, insulation		X	X			X	X				
	Instrumentation - Condition of the cables and cable ties		X				X	X				
	Rotor winding insulation **-** Wear, cleanliness, insulation resistance		X	X	*		X	X				
	Anti-condensation heaters **-** Operation, insulation resistance		X	X	*		X	X				
	Shaft position axial alignment		X	*			X	X				
	Connections on the rotor - Fastening, general condition		X				X	X				

	Servicing Work	Alternator in Operation	Type					Servicing Interval				
System	X = required * = if necessary O= see rating plate/documentation		Visual Inspection	Test and Measure	Clean	Repair or Replace	During Commissioning	Every 8,000 hours or 1 year	Every 20,000 hours or 3 years	Every 25,000 hours or 3 years	50,000 hours or 6 years	100,000 hours
Stator and Rotor	Grounding brushes - Operation and general condition	*	X				O	X				
	Fan - Soiling, condition		X				X	X				

11.3.4 Accessories

TABLE 16. ACCESSORIES MAINTENANCE

	SERVICING WORK	Alternator in operation	TYPE					Servicing Intervals				
System	X = required * = if necessary O= see rating plate/documentation		Visual inspection	Test and Measure	Clean	Repair or Replace	During Commissioning	Every 8,000 hours or 1 year	Every 20,000 hours or 3 years	Every 25,000 hours or 3 years	50,000 hours or 6 years	100,000 hours
Accessories	Resistive Temperature Detectors PT-100/PT1000 elements (stator, air cooling, bearings) - Resistance	*		X			X	X				
	Auxiliary terminal box - General condition, terminals, condition of wiring		X	X	*		X	X				

 Copyright © 2026 Cummins Inc

11.3.5 Slip Ring Units

TABLE 17. SLIP RING UNITS MAINTENANCE

	Servicing Work		Type					Servicing Intervals				
System	**X = required * = if necessary O= see rating plate/documentation**	**Alternator in Operation**	**Visual Inspection**	**Test and Measure**	**Clean**	**Repair or Replace**	**During Commissioning**	**Every 8,000 hours or 1 year**	**Every 20,000 hours or 3 years**	**Every 25,000 hours or 3 years**	**50,000 hours or 6 years**	**100,000 hours**
Slip Ring Units	Assembly - Fastening, insulation, connections	*	X		*	*	X	X				
	Brush holder - Alignment, function		X	X	*	*	X	X				
	Brushes - Wear, function		X	X		*	X	X				
	Slip ring wiring		X				X	X				
	Slip rings - Wear, roundness, patina		X				X	X				

11.3.6 Lubrication System and Anti-friction Bearings

TABLE 18. LUBRICATION SYSTEM AND ANTI-FRICTION BEARINGS MAINTENANCE

	Servicing Work		Type					Servicing Intervals				
System	X = required * = if necessary O= see rating plate/documentation	Alternator in Operation	Visual Inspection	Test and Measure	Clean	Repair or Replace	During Commissioning	Every 8,000 hours or 1 year	Every 20,000 hours or 3 years	Every 25,000 hours or 3 years	50,000 hours or 6 years	100,000 hours
Lubrication System and Anti-Friction Bearings	Bearings - During operation; general condition, noise, vibration	X	X	X		X	X					
	Bearing Replacement (During Service)								X			
	Bearing condition analysis - SPM measurement	X		X			X	X				
	Surplus grease - Condition and discharge		X		X			X				
	Lubrication system - freedom from leaks and function		X		*	*		X				
	Seals - Freedom from leaks		X			*		X				
	Grease - Paint and condition		X			*		X				
	Re-lubrication interval	X					O					
	Bearing insulation - Insulation resistance		X								X	

 Copyright © 2026 Cummins Inc

11.3.7 Lubrication System and Sleeve Bearings

TABLE 19. LUBRICATION SYSTEM AND SLEEVE BEARINGS MAINTENANCE

	Servicing Work		Type					Servicing Intervals				
System	X = required * = if necessary O = see rating plate/documentation	Alternator in Operation	Visual Inspection	Test and Measure	Clean	Repair or Replace	During Commissioning	Every 8,000 hours or 1 year	Every 20,000 hours or 3 years	Every 25,000 hours or 3 years	50,000 hours or 6 years	100,000 hours
Lubrication System and Sleeve Bearings	Bearing assembly - Fastening, general condition, soiling		X	X	*		X	X				
	Oil - Oil level		X			*	O					
	Bearing shells -General condition, wear		X		*						X	
	Loose lubrication ring - Condition, abraded material		X		*						X	
	Loose lubrication ring - Function		X			X	X					
	Gaskets and seals - Freedom from leak		X	X		*	X	X				
	Bearing insulation - Condition, insulation resistance		X			*					X	
	Operation - Freedom from leaks, operation		X	X		*	X	X				
	Oil - Change interval					X	O					
	Oil - Type, quality, quantity, flow rate, pressure		X	X		*		X				
	Oil lubrication - Function, amount of oil		X				X	X				
	Flow rate regulator - Function		X	X			X	X				
	Oil tank - Cleanliness, freedom from leaks		X		*		X	X				
	Additional units - Operation		X	X	*		X	X				
	Oil cooler / oil heating - Oil temperature		X	X	*		X	X				

11.3.8 Alternators Fitted With Open Cooling Systems

TABLE 20. OPEN COOLING SYSTEM MAINTENANCE

	Servicing Work	Alternator in Operation	Type					Servicing Intervals				
System	X = required * = if necessary O = see rating plate/documentation		Visual Inspection	Test and Measure	Clean	Repair or Replace	During Commissioning	Every 8,000 hours or 1 year	Every 20,000 hours or 3 years	Every 25,000 hours or 3 years	50,000 hours or 6 years	100,000 hours
Alternator Cooling	Fan - Operation, condition		X		*		X	X				
	Alternator inlet air Hindrance - amount		X				X	X				
	Filter - Cleanliness, operation		X		*	*	O					
	Air paths - Cleanliness, operation		X		*		X	X				

11.3.9 Alternators Fitted With Air-Air Cooling Systems

TABLE 21. AIR-AIR COOLING SYSTEM MAINTENANCE

	SERVICING WORK	Alternator in operation	TYPE					Servicing Intervals				
System	X = required * = if necessary O = see rating plate/documentation		Visual inspection	Test and Measure	Clean	Repair or Replace	During Commissioning	Every 8,000 hours or 1 year	Every 20,000 hours or 3 years	Every 25,000 hours or 3 years	50,000 hours or 6 years	100,000 hours
Air-air cooling	Fans - Operation, condition		X		*			X				
	Pipes - Cleanliness, operation		X		*			X				
	Ducts - Cleanliness, operation		X		*			X				
	Metal ribs - General condition		X		*			X				
	Vibration dampers - Condition and function		X			*		X				

 Copyright © 2026 Cummins Inc

11.3.10 Alternators Fitted With Air-Water Cooling System

TABLE 22. AIR-WATER COOLING SYSTEM MAINTENANCE

	SERVICING WORK		TYPE					Servicing Intervals				
System	X = required * = if necessary O = see rating plate/documentation	Alternator in operation	Visual inspection	Test and Measure	Clean	Repair or Replace	During Commissioning	Every 8,000 hours or 1 year	Every 20,000 hours or 3 years	Every 25,000 hours or 3 years	50,000 hours or 6 years	100,000 hours
Air-water cooling	Heat exchangers -Freedom from leaks, operation, pressure		X				X	X				
	Cooler condensate drain - Function, cleanliness		X		*		X	X				
	Pipes - Cleanliness, corrosion, freedom from leaks		X		X					X		
	Ducts - Cleanliness, operation		X		X					X		
	Cooler housing - Freedom from leaks, condition		X		*		X	X				
	Gaskets and seals -Freedom from leaks, condition, cracks		X			*		X				
	Metal ribs - General condition		X		*					X		
	Vibration dampers - Condition and function		X			*	X	X				
	Check for leaks		X	X	X	*	X	X				

11.3.11 Safety Maintenance Tasks

TABLE 23. SAFETY MAINTENANCE TASKS

	Servicing Work	Alternator in Operation	Type					Servicing Intervals				
System	X = required * = if necessary O= see rating plate/documentation		Visual Inspection	Test and Measure	Clean	Repair or Replace	During Commissioning	Every 8,000 hours or 1 year	Every 20,000 hours or 3 years	Every 25,000 hours or 3 years	50,000 hours or 6 years	100,000 hours
Safety	Alarm system - Function and correctness			X			X	X				
	Warning and shutdown temperatures - Correct adjustment, function			X			X	X				
	Overcurrent shutdown function		X	X			X	X				
	Check differential protection		X	X			X	X				

11.4 Servicing - General Structure

To ensure a long service life of the general structure of the alternator, the exterior of the alternator is to be kept clean and is to be regularly checked for rust, leaks and other faults. Soiling on the external parts of the alternator will subject the alternator to corrosion and can affect its cooling.

11.4.1 Strength of Screw Fasteners

NOTICE
Loose fastenings on these parts can result in sudden and serious damage. Check and re-tighten the fastenings regularly.

The strength of the screw fasteners is to be checked regularly. In particular attention is to be paid to the base fastening and the screws for the attachments; these screws must always be correctly tightened.

See the general values for tightening torques in **Table 24**.

 Copyright © 2026 Cummins Inc

TABLE 24. GENERAL TIGHTENING TORQUES (STEEL - STEEL)

Thread Size	Property Class	Tightening Torque Nm	Tightening Torque (Foot-Pound)
M4	8.8	3.0	2.2
	10.9	4.6	3.4
	12.9	5.1	3.8
M5	8.8	5.9	4.4
	10.9	8.6	6.3
	12.9	10.0	7.4
M6	8.8	10.1	7.4
	10.9	14.9	11.0
	12.9	17.4	12.8
M7	8.8	16.8	12.4
	10.9	24.7	18.2
	12.9	28.9	21.3
M8	8.8	24.6	18.1
	10.9	36.1	26.6
	12.9	42.2	31.1
M10	8.8	48	35
	10.9	71	52
	12.9	83	61
M12	8.8	84	62
	10.9	123	91
	12.9	144	106
M14	8.8	133	98
	10.9	195	144
	12.9	229	167
M16	8.8	206	152
	10.9	302	223
	12.9	354	261
M18	8.8	295	218
	10.9	421	311
	12.9	492	363
M20	8.8	415	306
	10.9	592	437
	12.9	692	363

Copyright © 2026 Cummins Inc

Thread Size	Property Class	Tightening Torque Nm	Tightening Torque (Foot-Pound)
M22	8.8	567	418
	10.9	807	595
	12.9	945	697
M24	8.8	714	527
	10.9	1017	750
	12.9	1190	878
M27	8.8	1050	774
	10.9	1496	1103
	12.9	1750	1291
M30	8.8	1428	1053
	10.9	2033	1499
	12.9	2380	1755
M33	8.8	1928	1422
	10.9	2747	2026
	12.9	3214	2371
M36	8.8	2482	1831
	10.9	3535	2607
	12.9	4136	3051
M39	8.8	3208	2366
	10.9	4569	3370
	12.9	5346	3943

NOTICE

The values in the table General tightening torques are of a general nature and do not apply to components such as diodes, auxiliary isolators, bearings, cable terminals or pole fastenings, bus bar terminals, overvoltage arrestors, current transformer fastenings, rectifiers or varistors or other electrical connections, or if another value is stated in this manual or in the manufacturer's documentation.

11.5 Servicing the Bearings and the Lubrication System

This section addresses the most important servicing work on the bearings and on the lubrication system.

11.5.1 Sleeve Bearings

In case of normal operating conditions, sleeve bearings only require little servicing.

To ensure reliable operation, the temperature is to be monitored and the oil level as well as the freedom of the bearing from leaks is to be checked.

 Copyright © 2026 Cummins Inc

11.5.1.1 Oil Tank

The oil tank must be designed so that no pressure from the tank can enter the oil return line to the bearing. The oil tank can be either a separate tank or comprise an external oil circuit. In both cases the tank must be arranged clearly below the bearing so that oil can flow to the tank from the bearings.

11.5.1.2 Pressure in the Oil Tank

The atmospheric pressure in the oil tank is to be checked. The pressure must not be higher than the pressure outside the bearing. In case of overpressure, the vent on the oil tank is to be checked or fitted if necessary.

11.5.1.3 Oil Lines

The oil return line is used to return the oil from the sleeve bearing to the oil tank with the lowest possible resistance. This is achieved by using a pipe with an adequately large diameter so that the flow of oil in the return line does not exceed 0.15 m/s (6 inch/s) based in the pipe cross-section.

- Install the oil outlet lines underneath the bearings with a minimum angle of 15°, which corresponds to a fall of 250 - 300 mm/m (3 – 3½ inch/foot).
- The line must be assembled so that the fall stated above is present on all parts of the line.
- Make sure that the line has an adequate diameter, is not clogged and that the entire oil return line has an adequate downward gradient.

11.5.1.4 Oil Flow

The inlet oil flow is calculated for each bearing. The oil flow must be adjusted appropriately during commissioning.

The alternator settings are defined on the outline drawing.

11.5.1.5 Oil Level

The oil level for a self-lubricating sleeve bearing must be regularly checked when the alternator is at standstill and at ambient temperature. It must be in the area from one third to half of the oil sight glass.

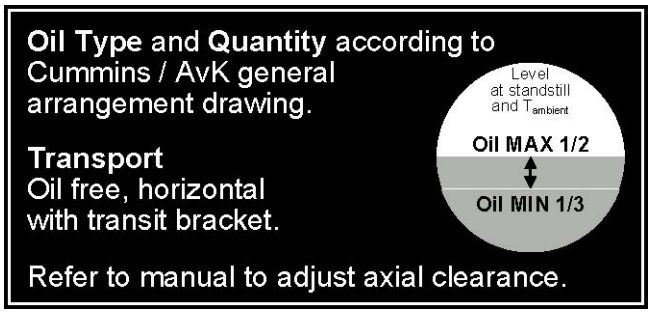

FIGURE 31. OIL LEVEL

Overfilled oil must be drained by opening the oil drain. For externally lubricated sleeve bearings the oil sight glass may be replaced with an oil outlet flange.

11.5.1.6 Bearing Temperature

The bearing temperatures are measured using a resistive temperature sensor PT100/PT1000. A temperature increase in the bearing beyond the alarm limit can be caused by either increased losses or by a reduced cooling capacity. This often indicates an alternator problem or a problem in the lubrication system and must be clarified.

Temperature variations may have various causes. If the temperature increase is followed by an increased vibration level, the problem may also be related to the alignment of the alternator, refer to; Generator Set Coupling, or damage to the bearing shells; in this case the bearing must be dismantled and checked.

11.5.1.7 Lubrication of Sleeve Bearings

The alternators are equipped with sleeve bearings that feature a very long service life, provided the lubrication functions continuously, the type of oil and quality of the oil correspond to the recommendations from the manufacturer and the instructions on oil changes are followed.

11.5.1.8 Lubricating Oil Temperature

The correct lubricating oil temperature is of significant importance for maintaining the bearing at the correct operating temperature and to ensure there is adequate lubrication. For alternators that are operated with oil supply systems, the incorrect function of the oil cooler or the oil heater and an incorrect oil flow can cause temperature problems. If temperature problems occur, check whether the quality and quantity of oil are correct for all bearings. For further information see **Section 11.5.1.9 on page 99** and **Section 11.5.1.11 on page 99**.

NOTICE
On starting the alternator pay attention to the ambient temperature. The temperature of the oil must not be below a minimum limit. State the minimum temperatures during order clarification. See standard IEC 60034. Consult Cummins Service department if your installation is below the minimum temperature. Starting at excessively low temperatures can result in serious bearing damage.

11.5.1.9 Recommended Check Values for Lubricating Oil

The lubricating oil is to be checked in relation to the following aspects:

- Use a test bottle to undertake a visual inspection of the oil for color, turbidity and deposits. The oil must be clear. The turbidity must not be caused by water. Check the odor of the oil. A strongly acidic or burnt odor is not acceptable.
- The water content must not exceed 0.05%
- The original viscosity must be maintained within a tolerance of ±10%.
- The oil must not contain any visible soiling. Its purity must correspond to ISO 4406 class 21/18/15 or SAE 4059 class 9
- The amount of metal soiling must be less than 50 PPM. An increase in this value is indicative of bearing damage.
- The increase in the acid number (AN) must not exceed 1 mg KOH per gram of oil. The AN value is not the BN value (base number).

If in doubt, an oil sample can be sent to the laboratory to determine the viscosity, the acid number, the tendency to foaming etc.

11.5.1.10 Lubricant Check

During the first year of operation it is recommended to take samples of the lubricating oil after around 1,000, 2,000 and 4,000 operating hours. Send the samples to the oil supplier for analysis. The optimal oil change interval can be determined based on the results.

After the first oil change, the oil can be analyzed in approximately middle and at the end of the oil change interval.

11.5.1.11 Oil Quality

Refer to the lubricant recommendation from the sleeve bearing manufacturer.

NOTICE
Check for the correct oil quality using the bearing identification plate and the outline drawing. Incorrect or soiled oil will result in serious bearing damage.

 Copyright © 2026 Cummins Inc

11.5.1.12 Oil Change Schedule for Mineral Oils and Synthetic Oil

⚠ CAUTION

Hazardous Substances

Hazardous substances can cause minor or moderate injury. Prolonged or repetitive exposure to hazardous substances can cause serious medical conditions. To prevent injury:

- ***Always read and obey the instructions provided by the product manufacturer.***
- ***Use, handle and store substances as specified by the product manufacturer.***
- ***Always wear appropriate personal protective equipment, refer to Safety Precautions Chapter.***

Perform the oil change interval for self-lubricating bearings after 8,000 operating hours, for externally lubricated bearings after 20,000 h.

For frequent starts, slow turning, high oil temperatures or excessively high contamination due to external effects, shorter intervals are required.

NOTICE

For slow turning and for frequent starts and stops, it is highly recommended to use a hydro static device.

11.5.2 Anti-Friction Bearings

11.5.2.1 Bearing Design

After the bearing has been filled with grease for the first time, it is not normally necessary to top-up the grease for a long time. However, in difficult operating conditions the grease must be regularly topped-up or replaced. For this purpose the bearing housing is designed so that the grease is easy to top-up. The bearing housing is designed so that the old grease will be replaced with fresh grease. In the bearing covers there is a space where the grease can be introduced. The grease runs slowly through the bearings and old grease, which escapes on the opposite side of the bearing, is drained via the grease regulator. The grease is guided to the exterior via the grease outlet.

11.5.2.2 Rating Plate: Lubrication and Re-lubrication Intervals

NOTICE

It is imperative the information stated on the rating plate is taken into account during the operation and servicing of the alternator.

All alternators are supplied with rating plates that are attached to the stator. The rating plates provide information on bearings, for instance:

- Type of grease used
- Re-lubrication interval
- Amount used for re-lubrication

11.5.2.3 Anti-Friction Bearing Grease for Extreme Temperature

If the bearing operating temperature is continuously:

- above 75 °C (167 °F)
- below 0 °C (32 °F)

Ask the manufacturer about suitable greases.

11.5.2.4 Re-lubrication

⚠ CAUTION

Hazardous Substances

Hazardous substances can cause minor or moderate injury. Prolonged or repetitive exposure to hazardous substances can cause serious medical conditions. To prevent injury:

- ***Always read and obey the instructions provided by the product manufacturer.***
- ***Use, handle and store substances as specified by the product manufacturer.***
- ***Always wear appropriate personal protective equipment, refer to Safety Precautions Chapter.***

All anti-friction bearings on rotating electrical machines must be regularly re-lubricated, see rating plate. The lubrication can be either manual or with the aid of an automatic system. In both cases make sure that an adequate amount of the correct lubricant reaches the bearing at the stipulated intervals.

Manual re-lubrication of the bearings

Alternators that are designed for manual lubrication are fitted with grease nipples. To ensure that no dirt enters the bearings, clean the grease nipples and their surrounding area thoroughly before lubrication.

Only re-lubricate with the alternator running!

Re-lubrication is always done at the alternator nominal speed. Re-lubrication at standstill is not allowed, as the grease will not be correctly distributed in the bearing. The grease takes the path of least resistance to the opposite side of the bearing. At standstill this means that the grease cannot flow out of the bearing chamber and the replacement of the old grease is not ensured.

11.5.2.5 Lubricating at Load

The load state of the alternator is not of significance during re-lubrication. Re-lubrication must be performed at the predominant related operating state on reaching the time for re-lubrication, whether full load or half load. It is important that the re-lubrication intervals are met and also documented.

11.5.2.6 Re-lubricating with Alternator Running

⚠ DANGER

Rotating Mechanical Parts

Rotating mechanical parts can cause serious injury or death by crushing, severing or trapping. To prevent injury:

- ***Before operating the alternator: The rotating coupling between the alternator and prime mover must be covered by a guard or cover.***
- ***Before attempting service or maintenance tasks or removing covers from rotating parts: Shut down and isolate the generator set from all energy sources, isolate stored energy and use lock out/tag out safety procedures.***

 Copyright © 2026 Cummins Inc

⚠ WARNING

Exposure to Ejected Debris and Particles

Ejected debris and particles can cause serious injury or death by impact, severing or puncturing. Exposure to mechanically driven release of debris and particles exists in all directions (horizontally and vertically) in the areas surrounding the alternator air outlet(s), air inlets(s) and the open shaft end (also commonly known as the Drive End (DE)). To prevent injury or death:

- ***Keep away from the air inlet(s) and air outlet(s) when the alternator is operating.***
- ***Do not position operator controls near the air inlet(s) or air outlet(s).***
- ***Do not cause overheating by running the alternator outside rating plate parameters.***
- ***Do not overload the alternator.***
- ***Do not operate an alternator displaying excessive vibration.***
- ***Do not synchronize parallel alternators outside the specified parameters.***

⚠ WARNING

Exposure to Ejected Debris and Particles

Ejected debris and particles can cause serious injury or death by impact, severing or puncturing. Exposure to mechanically driven release of debris and particles exists in all directions (horizontally and vertically) in the areas surrounding the alternator air outlet(s), air inlets(s) and the open shaft end (also commonly known as the Drive End (DE)). To prevent injury or death:

- ***Keep away from the air inlet(s) and air outlet(s) when the alternator is operating.***
- ***Do not position operator controls near the air inlet(s) or air outlet(s).***
- ***Do not cause overheating by running the alternator outside rating plate parameters.***
- ***Do not overload the alternator.***
- ***Do not operate an alternator displaying excessive vibration.***
- ***Do not synchronize parallel alternators outside the specified parameters.***

⚠ WARNING

Exposure to Particles and Fumes from an Alternator.

Particles and fumes can be released in all directions (horizontally and vertically) from where alternator ventilation is installed. To avoid injury:

- ***Avoid the areas around ventilation openings, air intake(s) and air outlet(s) when the alternator is operating.***
- ***Use the correct personal protective equipment when working around an alternator.***

Do not stand behind the alternator for the first 10 hours after lubrication. Re-lubrication can be done in various ways. The grease can be applied to the bearing in one pass or in several stages. The important aspects are the duration of the re-lubrication process and the order.

The re-lubrication of a bearing should not be completed in less than 5 minutes, and should also not take more than 30 minutes. The total amount of grease for the re-lubrication must not be exceeded or dropped below in any circumstances. The manufacturer recommends the use of suitable instruments to measure the amount of grease.

For the order in which the bearings are to be lubricated the combination of fixed, loose, fixed bearing is to be followed.

1. Clean the grease nipple and its surrounding area.
2. Make sure that you use grease as per the rating plate.

3. Measure (weight or volume) the amount of grease that is pressed in during one stroke.
4. Make sure the lubrication pipes are intact.
5. Press the stated amount of the type of grease stated into the bearing in the order stated above while following the requirements on the time taken.
6. Leave the alternator to run for 1-2 hours to make sure the old excess grease is pressed out of the bearing. The bearing temperature may increase temporarily during this time.

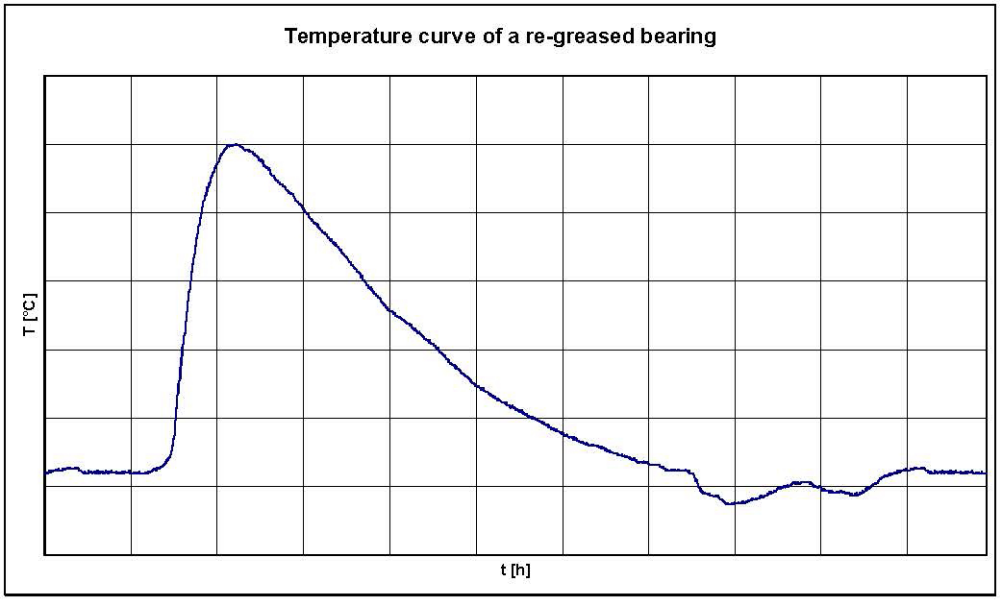

FIGURE 32. TEMPERATURE CURVE DURING RE-LUBRICATION

Engineers contracted by the manufacturer may act otherwise than stated in this section. They will decide on site, depending on the condition of the alternator and the ambient conditions, how to re-lubricate. The actions done by the service engineers must not be transferred to other alternators or be considered general instructions.

11.5.2.7 Automatic Re-lubrication

Numerous automatic lubrication systems are available on the market. However, we only recommend the use of electromechanical lubrication systems. The quality of the grease entering the bearing is to be checked at least once a year. The grease must be free of contamination and good in use. Do not use the grease after the shelf-life stated by the grease manufacturer. The separation of the base oil from the soap is not acceptable.

If an automatic lubrication system is to be used, consult the manufacturer and the lubrication system manufacturer about the lubrication interval and the amount of grease.

11.5.2.8 Shortage of Lubricant

A shortage of lubricant occurs:

- if the correct amounts of grease are not in the bearing.
- if the correct amounts of grease are not in the grease reservoir.
- if the bearing is not re-lubricated at the stipulated intervals using the correct amount of grease.
- if the oil is separated from the grease.

11.5.2.9 Grease Miscibility

Do not mix different types of greases together. The mixing of greases with different thickeners can change the characteristic and physical properties of the grease. Even with thickeners of the same type as a rule there will be differences in the additives with effects on the performance of the grease that can only be determined by checking the anti-friction bearing.

 Copyright © 2026 Cummins Inc

The usage of non-compatible greases leads to bearing damages.

11.5.2.10 Incorrect Grease

Using the wrong lubricating greases results in the premature failure of the alternator bearings and cause other damage.

11.5.2.11 Lubricant Pressure During Re-lubrication

When grease is pressed into the grease reservoir and into the bearing during re-lubrication, the pressures will change in the lubrication system. If the grease has been pressed into the grease reservoir during re-lubrication more quickly than the old grease flows out on the opposite side, the pressure on the bearing cover will further increase. With the alternator running the grease is now heated and expands. This also results in additional pressure being required for re-greasing the lubrication system.

Pressure too high

If you notice a significant pressure increase during re-lubrication (more force required for re-greasing than usual), check the lubrication system for:

- Unhindered discharge of the old grease
- Kinked or clogged fresh grease lines
- Leaks between shaft and bearing cover
- Leaks between bearing cover and bearing chamber
- Correct function of the grease nipple
- Intact grease gun
- Also check all screw fasteners and the bearing covers. Make sure to remove any discharged grease.

Pressure too low

If you notice a significant pressure decrease during re-lubrication (less force required for re-greasing than usual), check the lubrication system for:

- Leaks between shaft and bearing cover
- Intact fresh grease lines (e.g. broken or burst line)
- Correct function of the grease nipple
- Intact grease gun
- Also check all screw joints and the bearing covers. Make sure that any grease discharged is removed.

11.5.2.12 Temperature Increase due to Re-lubrication

The temperature increase in the bearing during or after re-lubrication is the consequence of the increased working of the grease as long as the currently increased amount of grease in the bearing has not been distributed. (See **Figure 32 on page 103**.)

In a anti-friction bearing with an adequate amount of lubricant, only a small amount of the lubricant is used for building up the lubricating film, not the total amount. Some of the lubricant is sprayed away, and some forms a lubricant flow in front of the rolling element/raceway contact zone.

This temperature increase settles to around the value before re-lubrication after the distribution of the grease.

An elevated temperature in the bearings can exist for up to 96 hours. During this period significant temperature increases can be seen (see **Section 11.5.2.6 on page 101**). An increase in the temperature is helpful for the lubricant change, as the old grease becomes softer and can escape better from the bearing. Finally, the increase in the temperature is a good indicator that the lubricant has actually reached the bearing.

When the temperature increases due to re-lubrication it is important that the warning and shutdown temperatures stipulated by the manufacturer are met.

11.5.2.13 Influence of the Grease Level

With the required amount of grease for re-lubrication, freshly filled bearings have a temperature significantly above the value before re-lubrication for operation hours up to days. The cause of this phenomenon is explained in **Section 11.5.2.12 on page 104**. After the first re-lubrication the grease reservoir in the bearing cover is completely filled, this increases the time required for the bearing temperature to drop again.

11.5.2.14 Grease Contamination

The more contaminants (water, dirt, fibers, metallic abraded material, etc.) found in the grease, the more the properties of the grease will be degraded. Unlike oil lubrication, in which contaminants can be filtered out, contamination can only be removed from the anti-friction bearing lubricant by prompt re-lubrication using fresh grease. The greatest risk is contamination with hard particles that can cause surface damage to the bearing raceways and finally premature bearing failure.

Grease contamination will result in the premature failure of the bearing.

11.5.2.15 Grease Hardening

Grease hardening will result in the premature failure of the bearing.

As a rule, grease hardening is caused by the absorption of dirt and moisture or due to oxidation of the grease constituents over a long period of time. A long storage time or period of alternator standstill can cause grease hardening (refer to **Section 5.2**). During this process the base oil separates from the thickener. So-called grease "bleeding" occurs.

11.5.2.16 Handling Bearings During Replacement

The bearings have a shorter service life than the alternator itself. They therefore need to be replaced from time to time.

- Do not fill a bearing with too much lubricant. The bearing may be damaged as a result. Do not mix different types of lubricant. Change your gloves before handling a different type of lubricant.
- Do not assemble bearings in statically charged environments. Pay attention to a dust-free environment and wear lint-free gloves during assembly.
- Store removed parts and tools in environments that are not statically charged and that are free of dust to prevent damage or soiling.
- A bearing will be damaged by the axial force that needs to be applied to remove it from the rotor shaft. Once removed, a bearing cannot be re-used.
- A bearing will be damaged by the application of force to the rolling element. Do not use force to fit any bearing components.
- Do not try to rotate the rotor by applying a lever to the fan blades. The fan will be damaged as a result.

The servicing of anti-friction bearings requires particular care, special tools and proper preparation to ensure the newly fitted bearings have a long service life.

During the servicing of the bearings, make sure that:

- At no time dirt or foreign bodies can enter the bearing during the servicing,
- The bearings and the rotor are not damaged during dismantling and assembly. Removal requires the use of pullers or heat, installation is done with the aid of heat or special tools.

If you are uncertain during the replacement of the bearings, contact the manufacturer.

 Copyright © 2026 Cummins Inc

11.6 Alternators with Bearing Insulation

The insulation resistance test on the bearings is performed in the factory. The insulation is necessary to avoid bearing currents which result in bearing damages. The insulation at one of the bearings interrupts the path of the current. Both ends of the shaft must not be insulated from the housing without further measures. The standard is that the NDE bearing is insulated.

11.6.1 Bearing Insulation on Sleeve Bearings

For alternators with the bearing insulated at the non-drive end, the bearing at the drive end is not insulated.

1. To test the resistance in the non-drive end bearing, remove the bearing shells or the drive end bearing plate and lift the rotor. This ensures that electrical contact between the rotor and another part, e.g. the stator or bearing housing, is not possible. Make sure that the circuit cannot be closed by the lifting equipment.
2. Remove any shaft grounding brushes, rotor grounding brushes and coupling (if they are made of conductive material) for the insulation test.
3. Measure the insulation resistance between the shaft and ground using 500 VDC as a maximum. The minimum insulation resistance is 10 kΩ.

11.6.2 Bearing Insulation on Anti-Friction Bearings

The bearing insulation is fitted in the bearing chamber. Check the integrity of the bearing insulation, the bearing chamber and the surrounding bearing plate regularly. A bearing insulation measurement is not possible with the alternator assembled. It is necessary to remove the uninsulated bearing from the alternator.

Check the bearing insulation when each bearing is replaced.

Remove any shaft grounding brushes, rotor grounding brushes and coupling (if they are made of conductive material) for the insulation test. Measure the insulation resistance between the shaft and ground using 500 VDC as a maximum. The minimum insulation resistance is 10 kΩ.

11.7 Service Windings

11.7.1 Safety Instructions for Servicing Windings

⚠ DANGER

Live Electrical Conductors

Live electrical conductors can cause serious injury or death by electric shock and burns. To prevent injury and before working on live conductors:

- ***Shut down and isolate the alternator from all energy sources.***
- ***Remove or isolate stored energy.***
- ***Test isolated parts for electrical isolation using a suitable voltage tester.***
- ***Use lock out/tag out safety procedures.***

⚠ DANGER

Testing Live Electrical Conductors

Live electrical conductors can cause serious injury or death by electric shock and burns. To prevent injury and before testing on or near live electrical conductors:

- ***Take applicable precautions to prevent contact with live conductors, refer to: Safety Precautions Chapter.***
- ***Test on or near live conductors, only if absolutely necessary.***
- ***Only trained personnel may test on or near live electrical conductors.***
- ***Do not test on or near live electrical conductors alone: Another competent person must be present, trained to isolate energy sources and take action in an emergency.***

⚠ WARNING

Incorrect Electrical Installation and System Protection

Incorrect electrical installation and / or system protection can cause serious injury or death by electric shock and burns. To prevent injury or death and before starting work, personnel:

- ***Have completed related, applicable and approved training.***
- ***Know the equipment, understand the task(s) and procedure(s).***
- ***Know related hazards / risks.***
- ***Know and obey site / location specific emergency procedures and applicable laws and regulations.***

⚠ CAUTION

Hazardous Substances

Hazardous substances can cause minor or moderate injury. Prolonged or repetitive exposure to hazardous substances can cause serious medical conditions. To prevent injury:

- ***Always read and obey the instructions provided by the product manufacturer.***
- ***Use, handle and store substances as specified by the product manufacturer.***
- ***Always wear appropriate personal protective equipment, refer to Safety Precautions Chapter.***

Hazardous servicing tasks on windings include:

For spray lacquering, ensure that the lacquering equipment, the alternator frame and the windings are earthed.

Solvents, lacquers and resins are required to clean and re-lacquer the windings.

11.7.2 Scheduling the Servicing

As a guideline the insulation resistance test should be done once a year. This rule is sufficient for the majority of alternators under the majority of operating conditions. Additional tests must be performed if problems occur.

The servicing schedule should be adapted to the specific circumstances at the customer, in the context of the recommended servicing intervals, i.e. to the servicing of other machines and the general operating conditions.

11.7.3 Correct Operating Temperature of Windings

Ensure the correct temperature of the windings:

- by keeping the external surfaces of the alternator clean.

 Copyright © 2026 Cummins Inc

- by checking the cooling system for correct operation.
- by monitoring the temperature of the coolant.

If the coolant is too cold, water may condense inside the alternator and the winding becomes damp, resulting in a degradation of the insulation resistance.

For air-cooled alternators it is important to monitor the cleanliness of any air filter fitted. The air filter cleaning and replacement interval is to be planned and implemented to suit the local operating environment. Increased winding temperatures can be indicative of a clogged air filter.

The operating temperature of the stator must be monitored using temperature sensors. Large differences between the values from the sensors can be indicative of damage to the windings.

11.7.4 Insulation Resistance Test

Measure the insulation resistance of the stator and rotor windings during the general servicing work, before the alternator is started for the first time or after extended standstill.

The insulation resistance value provides information on the moisture and soiling of the insulation.

For new alternators with dry windings, the insulation resistance is very high. However it can be very low if the alternator is subjected to incorrect transport, storage conditions and moisture, or is operated incorrectly.

- If the measured value is under the rated voltage in kV + 1 MOhm, the windings must be cleaned and/or dried. If these measures are insufficient, consult the manufacturer.
- If a moisture problem is suspected, dry the insulation before the resistance is measured.
- The insulation resistance will reduce with increasing winding temperature.

The insulation resistance stated in the test report is normally higher than that measured at site.

11.7.4.1 Windings Criteria in Normal Condition

The insulation resistance on dry windings should significantly exceed the minimum values. The insulation resistance is dependent on the age and the use of the alternator.

Typically, in test field measured insulation resistance values at approx. 25 °C winding temperature:

Rated voltage 3.3 kV up to 15 kV: > 1000 MOhm

Rated voltage 380 V up to 1000 V: ≥ 400 MOhm

Main rotor ≥ 300 MOhm

Exciter stator ≥ 50 MOhm

Resistive Temperature Detectors PT100/PT1000 & anti-cond. heater ≥ 50 MOhm

A low resistance is often caused by excessive moisture or by dirt, even though the actual insulation is intact.

11.7.4.2 Insulation Resistance Measurement on the Stator Windings

⚠ WARNING

Live Electrical Conductors

Live electrical conductors at the winding terminals can cause serious injury or death by electric shock or burns. After an insulation resistance test, to prevent injury or death:

- ***Discharge the windings immediately after the test has concluded by shorting to a suitable earth. The windings must discharge for the greater of:***
  1. ***A length of time equal to the duration of the test.***
     or
  2. ***5 minutes.***

⚠ WARNING

Incorrect Electrical Installation and System Protection

Incorrect electrical installation and / or system protection can cause serious injury or death by electric shock and burns. To prevent injury or death and before starting work, personnel:

- ***Have completed related, applicable and approved training.***
- ***Know the equipment, understand the task(s) and procedure(s).***
- ***Know related hazards / risks.***
- ***Know and obey site / location specific emergency procedures and applicable laws and regulations.***

The insulation resistance is measured using an insulation resistance tester. Before undertaking the tests, take the following precautions:

1. Make sure that all power supply cables are disconnected from the main power supply and secured against unintentional switching back on.
2. Check the tester for correct function.
3. Make sure the secondary connections on the current transformer including the replacement core are not open.
4. Make sure all power supply cables are disconnected.
5. Make sure the stator and the stator windings as well as the auxiliary exciter stator, exciter stator and any auxiliary windings that are not tested are grounded.
6. Measure the winding temperature on the PT100/PT1000 of the stator.
7. Ground all resistive temperature sensors
8. Remove any grounding in the voltage transformer.
9. Ground all Rotor cables and exciter rotor cables as well as auxiliary windings.

Measure the insulation resistance measurement in the terminal box. The test is normally done on the entire winding as an assembly; connect the tester between the stator housing and the winding. Ground the stator and leave the three phases of the stator winding connected to the star point. If the insulation resistance measured in the entire winding is lower than stated and the phase windings can be easily disconnected from each other, measure each phase separately. This action is not possible on all alternators. To measure separately, connect the tester between the stator and one of the windings. Ground the stator and the two phases not measured.

If phases are measured separately, remove all star points in the winding system.

11.7.4.3 Insulation Resistance Measurement on the Rotor Winding

⚠ WARNING

Live Electrical Conductors

Live electrical conductors at the winding terminals can cause serious injury or death by electric shock or burns. After an insulation resistance test, to prevent injury or death:

- ***Discharge the windings immediately after the test has concluded by shorting to a suitable earth. The windings must discharge for the greater of:***
  1. ***A length of time equal to the duration of the test.***
     or
  2. ***5 minutes.***

 Copyright © 2026 Cummins Inc

⚠ WARNING

Incorrect Electrical Installation and System Protection

Incorrect electrical installation and / or system protection can cause serious injury or death by electric shock and burns. To prevent injury or death and before starting work, personnel:

- ***Have completed related, applicable and approved training.***
- ***Know the equipment, understand the task(s) and procedure(s).***
- ***Know related hazards / risks.***
- ***Know and obey site / location specific emergency procedures and applicable laws and regulations.***

Measure the insulation resistance on the rotor winding using an insulation resistance tester. The test voltage for the rotor windings should be 1000 VDC.

1. Make sure that all power supply cables are disconnected from the main power supply and secured against unintentional switching back on.
2. Check the tester for correct function.
3. Make sure the alternator and the stator windings as well as the temperature monitoring, auxiliary winding, auxiliary exciter stator, exciter stator are grounded.
4. Make sure the shaft is grounded.
5. During the insulation resistance measurement in the exciter rotor the rotor windings not tested must be grounded. The rotor winding can be connected internally in series or 2 groups connected in parallel.
6. Measure the rotor winding temperatures. If this is not possible, use the stator winding temperatures as a reference.
7. Connect the insulation resistance tester between the entire rotor winding and the shaft. After the measurement, the rotor winding must be grounded for at least as long as the duration of the measurement to discharge the winding.

11.7.4.4 Other Servicing Work on the Windings

Windings are normally trouble-free and only require occasional cleaning and drying in addition to the regular monitoring described above. If unusual conditions make additional servicing work necessary, seek the advice of the manufacturer.

11.7.5 Insulation Resistance Measurement for Ancillary Equipment

If an anti-condensation heater is fitted:

1. Isolate the supply and measure the electrical resistance of the heater element(s). Replace the heater element if open circuit.
2. Connect together both ends of the heater leads.
3. Apply the test voltage between the winding and earth.
4. Measure the insulation resistance after 1 minute (IR 1 min).
5. Discharge the test voltage.
6. If the measured insulation resistance is less than the minimum accepted level, replace the heater element. See **Table 25 on page 111** for values.

TABLE 25. TEST VOLTAGE AND MINIMUM ACCEPTABLE INSULATION RESISTANCE FOR NEW AND IN-SERVICE ANTI-CONDENATION HEATERS

Component	Test Voltage (V)	Minimum Insulation Resistance at 1 minute (MΩ)	
		New	In-service
Anti-condensation heater	500	10	1

Do not measure the insulation resistance of PT100/PT1000 sensors.

To ensure the correct operation of the alternator and its ancillary equipment, refer to the documentation in the Customer Documentation.

11.7.6 Servicing the Grounding Brushes

⚠ DANGER

Rotating Mechanical Parts

Rotating mechanical parts can cause serious injury or death by crushing, severing or trapping. To prevent injury:

- ***Before operating the alternator: The rotating coupling between the alternator and prime mover must be covered by a guard or cover.***
- ***Before attempting service or maintenance tasks or removing covers from rotating parts: Shut down and isolate the generator set from all energy sources, isolate stored energy and use lock out/tag out safety procedures.***

Optimal servicing and care of the brushes and slip rings is a prerequisite for low wear. The brushes must be cleaned from time to time by blowing with air or vacuum cleaning.

- The servicing must be done at specific intervals. The frequency of this servicing depends on the size of the alternator as well as on the load conditions and ambient conditions.

It is recommended to initially check the brushes every three months to be able to estimate the replacement intervals under the actual operating conditions. Replace only with approved brushes.

- Check all brushes and holders for freedom of movement. Sticking brushes can result in damage.
- Renew worn brushes in good time so that damage to the brush contact surfaces is avoided.

TABLE 26. GROUND BRUSH COMPONENTS

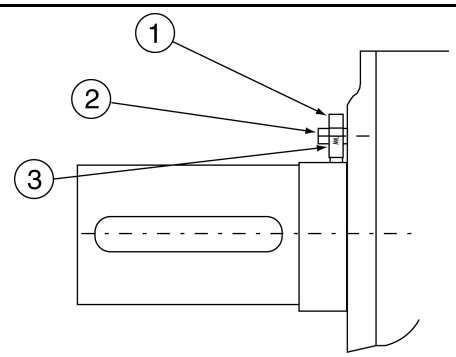

No.	Description	No	Description
1	Brush holder with ground connection and removable carbon brush spring	3	Carbon Brush
2	Brush pin		

 Copyright © 2026 Cummins Inc

11.7.6.1 Ground Fault Monitoring

⚠ DANGER

Rotating Mechanical Parts

Rotating mechanical parts can cause serious injury or death by crushing, severing or trapping. To prevent injury:

- ***Before operating the alternator: The rotating coupling between the alternator and prime mover must be covered by a guard or cover.***
- ***Before attempting service or maintenance tasks or removing covers from rotating parts: Shut down and isolate the generator set from all energy sources, isolate stored energy and use lock out/tag out safety procedures.***

TABLE 27. GROUND FAULT MONITORING

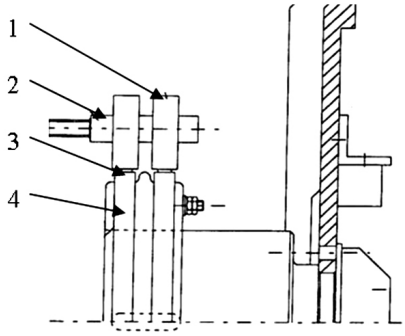

No.	Description	No.	Description
1	Brush holder with connection	3	Carbon Brush
2	Brush pin	4	Slip Rings

- Renew worn carbon brushes in good time so that damage to the slip rings is avoided and the correct function of the ground fault monitoring is ensured.

  Open the spring and replace the old carbon brushes with the new ones.
- New brushes must bed in on the slip rings.

Replace only with approved brushes. The ground fault monitoring is installed on the non-drive side of the alternator.

11.8 Servicing the Alternator Cooling

Check the alternator cooling regularly to ensure trouble-free operation.

11.8.1 Servicing Instructions for Alternators with Open-circuit Ventilation

The cooling airflow is normally provided by a fan mounted on the rotor. The cooling air must be clean and dry, as dirt and/or moisture entering the alternator reduces the cooling performance.

The alternator can be equipped with temperature sensors for monitoring the internal cooling air. As long as the temperature sensors indicate a temperature within the specified limits, no servicing other than regular inspection of the alternator is necessary.

Check the cooling system if the temperature sensors indicate an abnormal winding or cooling air temperature or a temperature near the alarm limit.

Possible causes of high cooling air temperature are:

- Waste heat from Malfunctions in the lubrication system or excessively high bearing temperatures.
- The minimum distances between the cooling air inlet and neighboring components are not maintained.
- The outlet air is drawn in with the inlet air.
- Defective temperature measuring instruments.

NOTICE
To avoid any material damage ensure that the distance between the air inlet (AI) or air outlet (AO) on the alternator and a wall or another plant component is at least a minimum of 500 mm (20 inch). Unhindered AI and AO must be ensured.

11.8.2 Service Instructions for Alternators with Air Filters

The servicing must be done at specific intervals. The frequency of this servicing depends on the size of the alternator as well as on the operation and ambient conditions.

The filter frame and the filter mats are made of:

Stainless steel with round stainless steel wire mesh fabric depending on the application conditions

Filter class:

EU2 in accordance with DIN 24185 / part 2

Medium filtration efficiency 65 ≤ 80%

- The servicing intervals are to be adapted to the local dust conditions.

Check the filter initially every three months to estimate the cleaning intervals under the actual operating conditions.

11.8.2.1 Cleaning the Air Filter

NOTICE
Remove the filter mats from the alternator for cleaning. Do not spray inside the alternator using a high-pressure cleaner.

Regular servicing and cleaning of the dust protection filter system is essential for the reliable operation of the alternator.

Do not wet filter mats using oil! Pay attention to environmental obligations!

Soiling such as salt, oil, fumes, chemicals, dust, sand etc. will reduce the efficiency of the insulation and result in premature failure of the windings.

Therefore it is necessary to clean the filters regularly. If the temperature sensors in the winding indicate an abnormal temperature close to the alarm level, the filters must be cleaned.

If a monitoring system for the filter differential pressure is used, replace the filters in case of a pressure alarm. The alarm is triggered if 50% of the air filter surface is clogged. Check the filter manually on a frequent basis.

For cleaning the filter with cleaning agent the following applies:

- Commercially available cleaning agents can be used for mechanized cleaning or cleaning using a high-pressure cleaner. The cleaning agent must be compatible with the materials.
- If only manual cleaning is possible, use Repoint / RG 1083 or equivalent.

 Copyright © 2026 Cummins Inc

11.8.3 Servicing Instructions for Alternators with Heat Exchangers

Over time soiling on the cooling surface and the pipes will reduce the cooling performance. Clean the heat exchanger at regular intervals according to local conditions. Check the heat exchanger frequently during the initial operating period.

Clean the heat exchanger using compressed air or clean it using a soft round brass brush. Do not use steel brushes in or on aluminum pipes, as these pipes may be damaged.

11.8.3.1 Air-Water Heat Exchanger

If the temperature sensors indicate a normal operating temperature and the leak detectors are not indicating any leak, visual inspection of the alternator at a servicing interval is sufficient.

For information on servicing the heat exchanger, see documentation from the manufacturer in the Customer Documentation.

11.8.3.2 Air-Air Heat Exchanger

Visual inspection at a servicing interval is sufficient.

For information on servicing the heat exchanger, see documentation from the manufacturer in the Customer Documentation.

11.9 Rectifier System

11.9.1 Rectifier System - Alternators With Grid Code Compliance

11.9.1.1 Introduction

The rectifier comprises three or six diodes fixed to a rectifier plate that is mounted on, and rotates with, the main rotor shaft at the non-drive end (NDE). The diodes provide a low resistance to current in one direction only (by convention, positive current flows from anode to cathode as electrons flow from cathode to anode) to convert alternating current (a.c.) induced in the exciter rotor windings into direct current (d.c.) to magnetize the main rotor poles.

The dc output of the rectifier connects to the main rotor and also to a matched pair of varistors and two pairs of resistors. These additional components protect the rectifier from voltage spikes and surge voltages that may be present on the rotor under various loading conditions of the alternator.

11.9.1.2 Safety

⚠ DANGER

Live Electrical Conductors

Live electrical conductors can cause serious injury or death by electric shock and burns. To prevent injury and before working on live conductors:

- ***Shut down and isolate the alternator from all energy sources.***
- ***Remove or isolate stored energy.***
- ***Test isolated parts for electrical isolation using a suitable voltage tester.***
- ***Use lock out/tag out safety procedures.***

⚠ DANGER

Rotating Mechanical Parts

Rotating mechanical parts can cause serious injury or death by crushing, severing or trapping. To prevent injury:

- ***Before operating the alternator: The rotating coupling between the alternator and prime mover must be covered by a guard or cover.***
- ***Before attempting service or maintenance tasks or removing covers from rotating parts: Shut down and isolate the generator set from all energy sources, isolate stored energy and use lock out/tag out safety procedures.***

⚠ WARNING

Incorrect Electrical Installation and System Protection

Incorrect electrical installation and / or system protection can cause serious injury or death by electric shock and burns. To prevent injury or death and before starting work, personnel:

- ***Have completed related, applicable and approved training.***
- ***Know the equipment, understand the task(s) and procedure(s).***
- ***Know related hazards / risks.***
- ***Know and obey site / location specific emergency procedures and applicable laws and regulations.***

11.9.1.3 Requirements

TABLE 28. REQUIREMENTS (WITH GRID CODE COMPLIANCE

Personal Protective Equipment (PPE)	Wear appropriate protective equipment (PPE).
Consumables	Loctite 241 thread locking adhesive
	Dow Corning silicone heat sink compound type 340 or similar
	H0720 Isoglas tape
Parts	Full set of six diodes (all from the same manufacturer)
	Two varistors (same type, same manufacturer, same voltage grading: A, B, C, D, E, F)
	Full set of four snubber resistors (same type, same manufacturer)
Tools	Multimeter
	Insulation Tester
	Torque wrench

11.9.1.4 Method

1. Remove the rectifier cap.

11.9.1.4.1 Test and Replace Resistors

1. Inspect each of four resistors.
2. Record resistor as faulty if there are any signs of discolouration or overheating.
3. Disconnect one resistor lead from the diode terminal. Store fastener and washers.
4. Measure the resistance of each resistor, using the ohms range of a digital multimeter.

 Copyright © 2026 Cummins Inc

5. Record resistor as faulty if the resistance is outside the range 50 Ω ± 10 %.
6. If any resistor is faulty, replace all resistors, replace both varistors with a matching pair (same type, same manufacturer and same voltage grading: A, B, C, D, E, F) and replace all diodes.
7. Reconnect and check that all leads are secure, washers fitted and fasteners tight.

11.9.1.4.2 Test and Replace Varistors

1. Inspect both varistors.
2. Record varistor as faulty if there are signs of overheating (discoloration, blisters, melting) or disintegration. Check for loose connectors vs. varistor body.
3. Disconnect the varistor leads.
4. A serviceable varistor will read open circuit in both directions using a multimeter (set in the Ohms (Ω) range). A faulty varistor can read short circuit in both directions and/or it may be physically damaged.
5. If either varistor is faulty, replace both varistors with a matched pair (same type, same manufacturer and same voltage grading: A, B, C, D, E, F) and replace all diodes.
6. Reconnect and check that all leads are secure, washers fitted and fasteners tight.

11.9.1.4.3 Test and Replace Diodes

1. Label the exciter rotor (U, V, W) leads and their connection terminals.
2. Disconnect the exciter rotor leads and their three diode block connecting bars. Store the bars, fasteners and washers.
3. Measure the voltage drop across one diode block in the forward direction, using the diode test function of a multimeter.
4. Measure the resistance across the same diode block in the reverse direction, using the 1000 V d.c. test voltage of an insulation tester.
5. Diode is faulty if the voltage drop in the forward direction is outside the range 0.3 to 0.7 V, or the resistance is below 20 MΩ in the reverse direction.
6. Repeat the tests for the five remaining diode blocks.
7. If any diode block is faulty, replace the full set of six diode blocks (same type, same manufacturer):
   a. Remove the existing diode blocks.
   b. Apply heat conductive paste to the base of each replacement diode block.
   c. Fix each replacement diode block to the rectifier plate.
   d. Replace both varistors with a matched pair (same type, same manufacturer and same voltage grading: A, B, C, D, E, F).
   e. Fix each replacement varistors to the bracket on the rectifier plate.
8. Reconnect and check that all leads are secure, washers fitted and fasteners tight.

11.9.1.5 Refit

1. Secure the exciter rotor leads and varistor leads to the connecting bars with Isoglas tape.
2. Refit the rectifier cap.

11.9.1.6 Rectifier

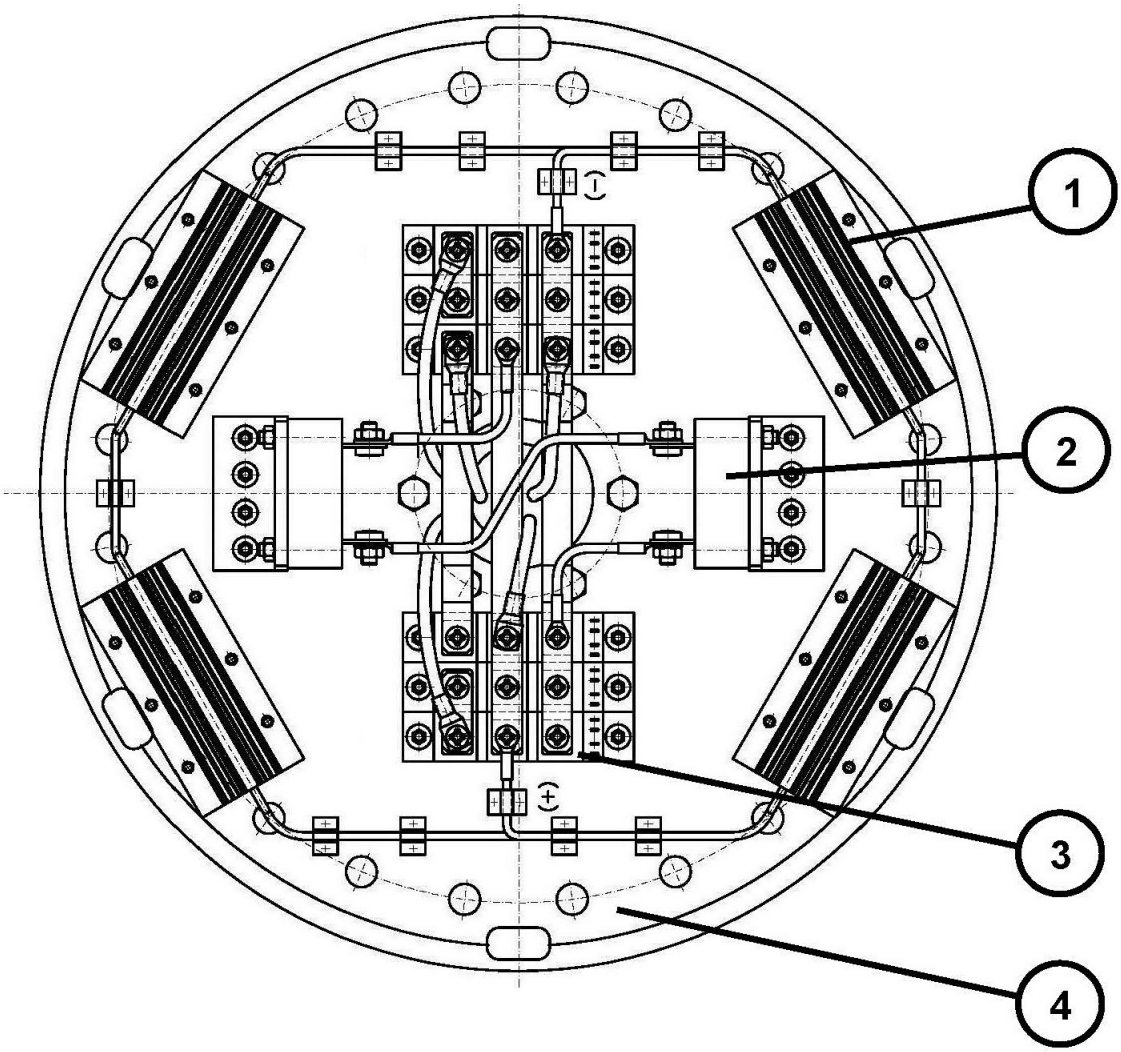

FIGURE 33. RECTIFIER FOR ALTERNATORS WITH GRID CODE

TABLE 29. RECTIFIER COMPONENTS

Reference	Component	Fastener	Quantity	Torque (Nm)
1	Resistor	M4 x 14	6	6
2	Varistor	M5 x 25	2	6
3	Diode	M6 x 20	2	6
4	Rectifier plate	M8 x 40	6	20

 Copyright © 2026 Cummins Inc

11.9.2 Rectifier System for Alternators without Grid Code Compliance

11.9.2.1 Introduction

The rectifier comprises three or six diodes fixed to a rectifier plate that is mounted on, and rotates with, the main rotor shaft at the non-drive end (NDE). The diodes provide a low resistance to current in one direction only (by convention, positive current flows from anode to cathode as electrons flow from cathode to anode) to convert alternating current (a.c.) induced in the exciter rotor windings into direct current (d.c.) to magnetize the main rotor poles.

The dc output of the rectifier connects to the main rotor and also to a matched pair of varistors. These additional components protect the rectifier from voltage spikes and surge voltages that may be present on the rotor under various loading conditions of the alternator.

11.9.2.2 Safety

⚠ DANGER

Live Electrical Conductors

Live electrical conductors can cause serious injury or death by electric shock and burns. To prevent injury and before working on live conductors:

- ***Shut down and isolate the alternator from all energy sources.***
- ***Remove or isolate stored energy.***
- ***Test isolated parts for electrical isolation using a suitable voltage tester.***
- ***Use lock out/tag out safety procedures.***

⚠ DANGER

Rotating Mechanical Parts

Rotating mechanical parts can cause serious injury or death by crushing, severing or trapping. To prevent injury:

- ***Before operating the alternator: The rotating coupling between the alternator and prime mover must be covered by a guard or cover.***
- ***Before attempting service or maintenance tasks or removing covers from rotating parts: Shut down and isolate the generator set from all energy sources, isolate stored energy and use lock out/tag out safety procedures.***

⚠ WARNING

Incorrect Electrical Installation and System Protection

Incorrect electrical installation and / or system protection can cause serious injury or death by electric shock and burns. To prevent injury or death and before starting work, personnel:

- ***Have completed related, applicable and approved training.***
- ***Know the equipment, understand the task(s) and procedure(s).***
- ***Know related hazards / risks.***
- ***Know and obey site / location specific emergency procedures and applicable laws and regulations.***

11.9.2.3 Requirements

TABLE 30. REQUIREMENTS (ALTERNATORS WITHOUT GRID CODE COMPLIANCE)

Personal Protective Equipment (PPE)	Wear appropriate protective equipment (PPE).
Consumables	Loctite 241 thread locking adhesive
	Dow Corning silicone heat sink compound type 340 or similar
	H0720 Isoglas tape
Parts	Full set of three or six diodes (all from the same manufacturer)
	Two varistors (same type, same manufacturer, same voltage grading: A, B, C, D, E, F)
Tools	Multimeter
	Insulation Tester
	Torque wrench

11.9.2.4 Method

1. Remove the rectifier cap.

11.9.2.4.1 Test and Replace Varistors

1. Inspect both varistors.
2. Record varistor as faulty if there are signs of overheating (discoloration, blisters, melting) or disintegration. Check for loose connectors vs. varistor body.
3. Disconnect the varistor leads.
4. A serviceable varistor will read open circuit in both directions using a multimeter (set in the Ohms (Ω) range). A faulty varistor can read short circuit in both directions and/or it may be physically damaged.
5. If either varistor is faulty, replace both varistors with a matched pair (same type, same manufacturer and same voltage grading: A, B, C, D, E, F) and replace all diodes.
6. Reconnect and check that all leads are secure, washers fitted and fasteners tight.

11.9.2.4.2 Test and Replace Diodes

1. Label the exciter rotor (U, V, W) leads and their connection terminals.
2. Disconnect the exciter rotor leads and their three diode block connecting bars. Store the bars, fasteners and washers.
3. Measure the voltage drop across one diode block in the forward direction, using the diode test function of a multimeter.
4. Measure the resistance across the same diode block in the reverse direction, using the 1000 V d.c. test voltage of an insulation tester.
5. Diode is faulty if the voltage drop in the forward direction is outside the range 0.3 to 0.7 V, or the resistance is below 20 MΩ in the reverse direction.
6. Repeat the tests for the five remaining diode blocks.
7. If any diode block is faulty, replace the full set of six diode blocks (same type, same manufacturer):
    a. Remove the existing diode blocks.
    b. Apply heat conductive paste to the base of each replacement diode block.

 Copyright © 2026 Cummins Inc

c. Fix each replacement diode block to the rectifier plate.

d. Replace both varistors with a matched pair (same type, same manufacturer and same voltage grading: A, B, C, D, E, F).

e. Fix each replacement varistors to the bracket on the rectifier plate.

8. Reconnect and check that all leads are secure, washers fitted and fasteners tight.

11.9.2.5 Refit

1. Secure the exciter rotor leads and varistor leads to the connecting bars with Isoglas tape.
2. Refit the rectifier cap.

11.9.2.6 Rectifier - 3 Diode Version

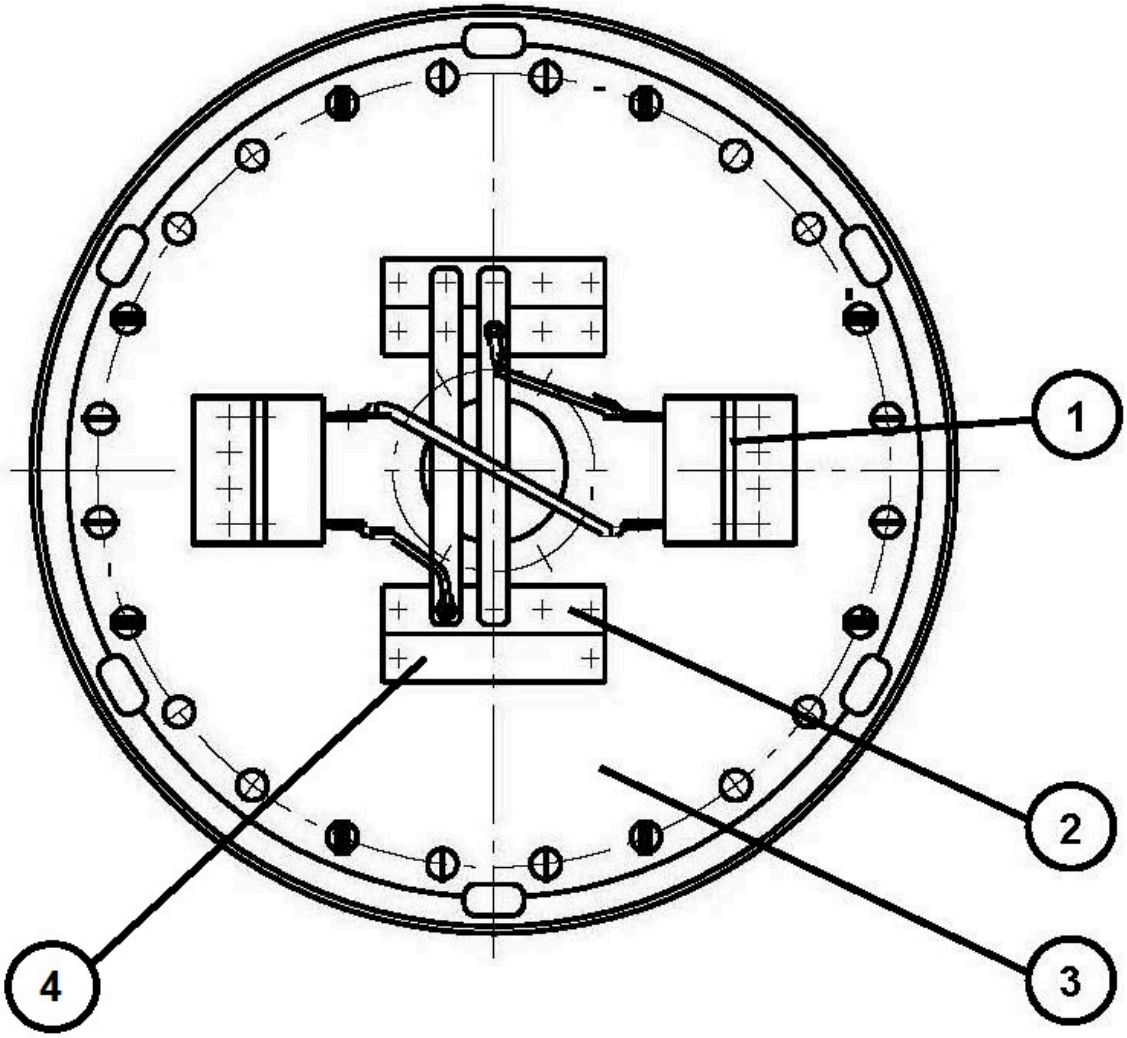

FIGURE 34. RECTIFIER - 3 DIODE VERSION

TABLE 31. RECTIFIER COMPONENTS

Reference	Component	Fastener	Quantity	Torque (Nm)
1	Varistor	M5 x 25	2	6
2	Diode	M6 x 20	2	6
3	Rectifier plate	M8 x 40	6	20

11.9.2.7 Rectifier - 6 Diode Version

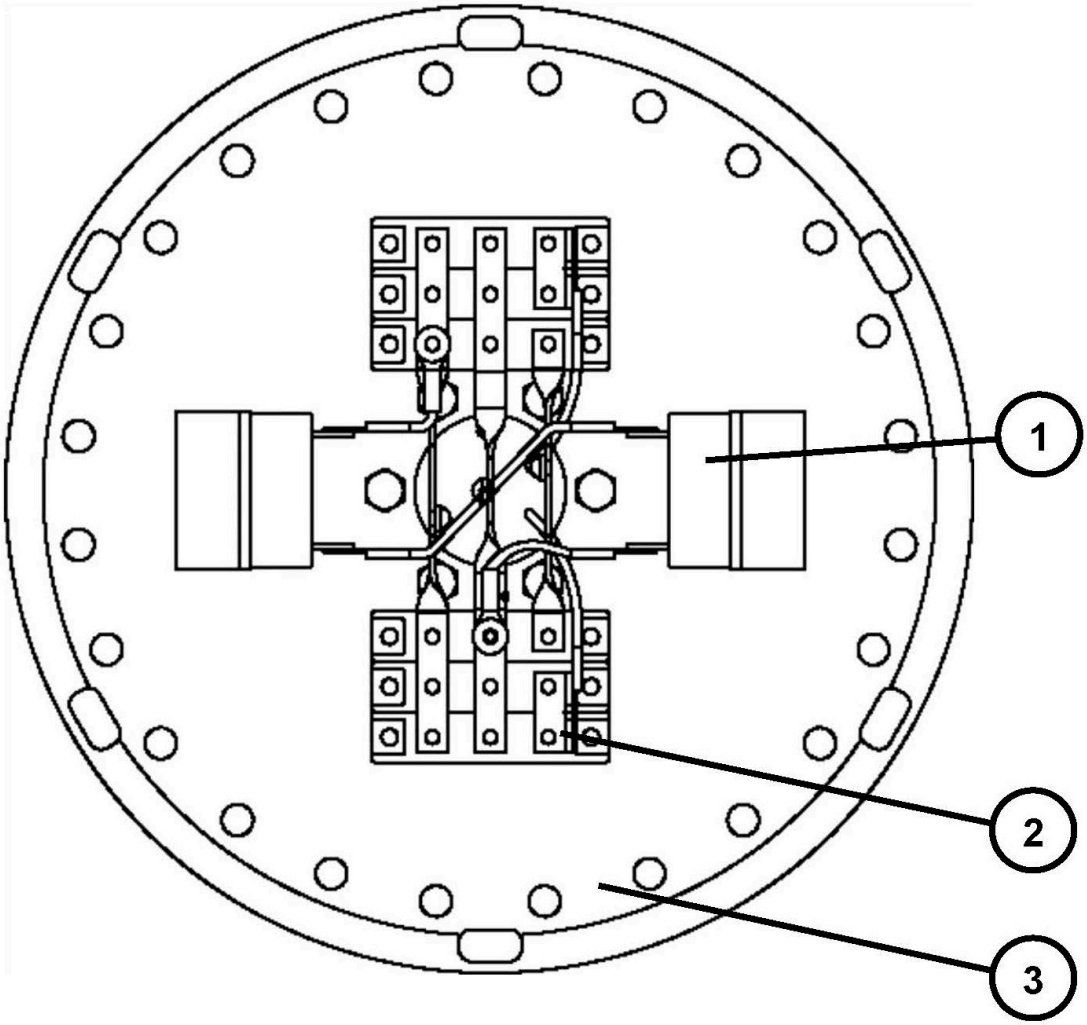

FIGURE 35. RECTIFIER - 6 DIODE VERSION

TABLE 32. RECTIFIER COMPONENTS

Reference	Component	Fastener	Quantity	Torque (Nm)
1	Varistor	M5 x 25	2	6
2	Diode	M6 x 20	2	6
3	Rectifier plate	M8 x 40	6	20

11.10 Repairs, Dismantling and Re-assembly

NOTICE
Incorrect handling, repair, dismantling and re-assembly will result in serious damage.

All work related to repair, dismantling and re-assembly must be done by specially trained personnel.

 Copyright © 2026 Cummins Inc

This page is intentionally blank.

12 Fault Finding

Before starting any fault finding procedure, examine all wiring for broken or loose connections. If in doubt, refer to the wiring diagram supplied with the alternator.

The following list is to aid in troubleshooting and is not exhaustive. If after completing the appropriate action the problem still persists refer to the Fault Finding manual or STAMFORD | AvK™ customer services **www.stamford-avk.com**.

 Copyright © 2026 Cummins Inc

12.1 General Alternator

TABLE 33. GENERAL FAULT FINDING

Symptom	Possible Cause	Measure
Vibration Noise	Malfunction in the lubrication system	Check quality and quantity of lubricant as well as system function
	Malfunction in the bearing/bearing components damaged	Check condition of the bearing, replace faulty parts
	Malfunction in the bearing/bearing fitted incorrectly after replacement	Open and correct adjustments
	Malfunction in the cooling fan/imbalance/damage on the fan	Check fan, clean, replace in case of damage and identify cause
	Displacement of the machine	Check and make sure correct alignment of the machine
	Imbalance on rotor/shaft or coupling	Check imbalance and re-balance
	Vibration on the prime mover	Check type of coupling, check foundation, check decoupling of the attachments from the unit
	Axial load	Check alignment as well as coupling function and coupling type
	Coupling fitted incorrectly	Check and make sure correct coupling assembly
	Excessive line asymmetry	Ensure compliance with the line symmetry requirements
	Loose part	Repair, replace or re-fasten if necessary
	Damaged parts	Identify and correct the cause and replace damaged parts
Noise	Loose parts	Repair, replace or re-fasten if necessary
	Electrical noises	Check stator, rotor
	Malfunction in the cooling system	Check cooling system, clean and repair as necessary
	Foreign bodies, moisture or dirt in the machine	Check the interior of the alternator for damage and clean, dry the windings, remove foreign bodies

Symptom	Possible Cause	Measure
Vibration	Inadequate, damaged foundation	Check foundation in consultation with the manufacturer of the unit and Cummins
	Tilting foot, fastening of the alternator inadequate	Check fastening and re-align

12.2 Lubrication System and Anti-friction Bearings

TABLE 34. LUBRICATION SYSTEM AND ANTI-FRICTION BEARING FAULT FINDING

Symptom	Possible Cause	Measure
High bearing temperature	Inadequate lubrication	Check bearings, check amount of grease in the bearing and re-lubricate, refer to the manufacturer's grease recommendations,
High bearing temperature, grease in the machine	Inadequate lubrication	Check grease line system for leaks, check re-lubrication intervals
High bearing temperature, grease in the machine	Excessive lubrication	Check bearings, check amount of grease in the bearing and reduce, refer to the manufacturer's grease recommendations
High bearing temperature	Axial/radial load excessive/coupling and installation defects	Check coupling, installation and alignment
High bearing temperature	Machine displacement	Re-align machine
High bearing temperature, grease in the machine	Grease outlet blocked	Clean grease outlet,
High bearing temperature, bearing noise or vibration	Bearings fitted incorrectly after replacement	Check installation of the bearings and attachments
	Quality of grease degraded/incorrect re-lubrication interval	Check bearings, check re-lubrication log, quality of grease, type of grease
	Bearing currents	Check bearing insulation, repair, replace bearing if necessary
	Bearing damaged/failure of the bearing	Replace faulty bearing parts
	Bearing damaged/normal wear	Replace bearing
Bearing noise or vibration, visible damage	Foreign body in the bearing	Correct cause, replace bearing and check condition of the seal, attachments
Grease leaks, grease in the machine	Line system faulty, grease outlet malfunction	Correct cause, clean grease outlet and alternator
High bearing temperature	Instrument fault/temperature sensor faulty	Check bearing temperature monitoring system

 Copyright © 2026 Cummins Inc

Symptom	Possible Cause	Measure
Grease leaks	Bearing seals damaged or worn	Replace bearing seals
High bearing temperature	Lubrication system malfunction	Check re-lubrication intervals, quantity and if grease has hardened
Grease leaks	External vacuum/rotating equipment in the vicinity	Check pressures, change position of the rotating equipment

12.3 Lubrication System and Sleeve Bearings

TABLE 35. LUBRICATION SYSTEM FAULT FINDING

SYMPTOM	POSSIBLE CAUSE	MEASURE
High bearing temperature, oil leaks, bearing noise of vibration, visible degradation of the quality of the oil	Axial load excessive/coupling and installation defects	Check coupling, installation and alignment, check adjustment indicator
High bearing temperature, bearing noise or vibration, visible degradation of the quality of the oil	Inadequate lubrication/oil level low	Check bearing for leaks, top-up oil
	Bearing shells damaged/contamination of the oil	Change oil, check condition of bearing, replace bearing shells if necessary
High bearing temperature, oil leaks, oil in the machine, visible degradation of the quality of the oil	Unsuitable oil quality	Refer to the manufacturer's oil specification
Oil leaks, oil in the machine	Too much oil and damaged seals	Clean bearings and alternator, replace seals and fill with correct amount of oil
High bearing temperature, oil leaks, bearing noise of vibration	Machine displacement	Re-align machine and replace seals if necessary
Bearing noise or vibration, visible degradation of the quality of the oil	Foreign body in the bearing	Remove foreign body and clean the bearing. Check condition of the seals, and replace if necessary
Oil leaks, oil in the machine	Pressure differences in and on the bearing/pressure equalization malfunction	Correct cause of the pressure difference

SYMPTOM	POSSIBLE CAUSE	MEASURE
High bearing temperature, bearing noise or vibration	Degradation of the quality of the oil/incorrect oil change interval/incorrect oil	Clean bearings and change oil
	Bearings fitted incorrectly	Check installation and adjustment of the bearing
	Bearing shells damaged/bearing currents	Repair bearing insulation, replace bearing shells
	Bearing shells damaged/failure of the bearing	Replace faulty bearing parts
	Bearing shells damaged/normal wear	Replace bearing shells
	Bearing shells damages/increased wear due to number of starts and stops	Replace bearing shells, possibly retrofit hydrostatics
High bearing temperature	Instrument fault/temperature sensor faulty	Check bearing temperature monitoring system
	Function of the oil lubrication or loose lubrication ring degraded	Correct cause
Oil leaks	Bearing seals damaged or worn	Replace bearing seals
	External under pressure or overpressure/rotating equipment in the vicinity	Check pressures, change position of the rotating equipment, fit additional seal if necessary
Oil in the machine	Machine seal damaged	Replace machine seal
Formation of bubbles in the oil	Incorrect oil, contamination of the oil	Refer to the manufacturer's oil specification, change oil

 Copyright © 2026 Cummins Inc

12.4 Open Cooling System

TABLE 36. OPEN COOLING FAULT FINDING

Symptom	Possible Cause	Measure
High Winding Temperature, High Cooling Air Temperature	High inlet air temperature/ambient air too hot	Change air management
	High inlet air temperature/outlet air is drawn in again	Change air management, ensure adequate space around the machine,
	High inlet air temperature/heat source in the vicinity	Remove or re-position heat sources, check ventilation
	Inadequate air flow/machine interior soiled	Clean alternator parts and air gaps
	Inadequate air flow/air ducts incorrectly arranged	Check condition of the air duct, correct installation defects
	Inadequate air flow/inlet openings blocked	Clean deposits from inlet openings
	Inadequate air flow/air filter clogged	Clean or replace air filters
	Fan damaged	Replace fan
	Incorrect speed, direction of rotation	Adjust speed, direction to the manufacturer's specifications
	Instrumentation or measuring system defect	Check measurements, sensors and wiring
High Winding Temperature	Overload/control system settings	Check control system, remove overload
	Line asymmetry	Ensure compliance with the line symmetry requirements
	Winding damage	Check windings
	Reactive load outside the specifications	Correct cause

12.5 Air-Air Cooling System

TABLE 37. AIR-AIR COOLING SYSTEM FAULT FINDING

Symptom	Possible Cause	Measure
High Winding Temperature, High Cooling Air Temperature	Drop in the performance of the main cooling system/fan damaged	Replace fan
	Drop in the performance of the main cooling system/fan is rotating in the wrong direction	Replace fan
	Drop in the performance of the main cooling system/interior of the machine soiled	Correct cause of the soiling, clean alternator parts and air gaps
	Drop in the performance of the secondary cooling system/external fan damaged	Repair or replace fan
	Drop in the performance of the secondary cooling system/fan is rotating in the wrong direction	Correct direction of rotation of the external fan
	Drop in the performance of the secondary cooling system/cooler leaking	Repair cooler
	High inlet temperature/ambient air too hot	Change air management
	High inlet temperature/outlet air is drawn in again	Ensure adequate space around the alternator
	High inlet temperature/heat sources in the vicinity	Remove or re-position heat sources, check ventilation
	Incorrect speed, direction of rotation	Adjust speed, direction to the manufacturer's specifications
	Instrumentation or measuring system defect	Check measurements, sensors and wiring
High Winding Temperature	Overload/control system settings	Check control system, remove overload
	Line asymmetry	Ensure compliance with the line symmetry requirements
	Excessively frequent starts	Leave machine to cool down before the start
	Winding damage	Check windings
	Reactive load outside the specifications	Correct cause

 Copyright © 2026 Cummins Inc

12.6 Air-Water Cooling System

TABLE 38. AIR-WATER COOLING SYSTEM FAULT FINDING

Symptom	Possible Cause	Measure
High Winding Temperature, High Cooling Air Temperature, Water Leak Alarm	Drop in the performance of the secondary cooling system/leak in the cooler	Replace cooler
	Instrumentation or measuring system defect	Check measurements, sensors and wiring
High Winding Temperature, High Cooling Air Temperature	Drop in the performance of the main cooling system/fan damaged	Check fan, cooling circuit
	Incorrect direction of fan rotation	Replace fan
	Drop in the performance of the main cooling system/interior of the machine soiled	Correct cause of the soiling, clean alternator parts and air gaps
	Drop in the performance of the secondary cooling system/coolant pipes blocked	Open cooler and clean pipes
	Drop in the performance of the secondary cooling system/coolant pump faulty	Check pump and repair
	Drop in the performance of the secondary cooling system/incorrect flow rate adjustment	Check coolant flow and adjust correctly
	Drop in the performance of the secondary cooling system/air in the cooler	Bleed cooler
	Drop in the performance of the secondary cooling system/emergency ventilation flap open	Securely close emergency ventilation flap
	Cooling water inlet temperature too high	Adjust cooling water temperature correctly
High Winding Temperature	Overload/control system settings	Check control system, remove overload
	Line asymmetry	Ensure compliance with the line symmetry requirements
	Excessively frequent starts	Leave machine to cool down before the start
	Winding damage	Check windings
	Reactive load outside the specifications	Correct cause

12.7 Faults on the Brushes

TABLE 39. FAULTS ON BRUSHES

Symptom	Possible Cause	Measure
Brushes not working correctly	Brushes are worn	Replace the brushes and check the surface of the shaft
	Brushes are sticking in the holders	Loosen the brushes, check the size and if necessary replace the brushes
	Brushes are excessively loose in the holders	If brushes are worn out or are too small, replace
		Wrong size, check the size and replace
	Loose connection at the brush terminals	Tighten the connection
	Incorrect bedding in of the brushes	Replace the brushes
	Incorrect and uneven brush pressure	Re-adjust the holder of the brushes
	Mating faces on the slip rings worn or soiled	Clean and if necessary replace the slip ring and the brushes
	Type of carbon brushes is not suitable for the operating conditions	Operate the alternator only according to the rating plate. Consult Cummins service department regarding the operating conditions.
	Imbalance in the alternator	Arrange for re-balancing of the alternator by specially trained personnel only
	Uneven air gaps as a result of worn bearings.	Check the bearing and replace the bearing if necessary

12.8 Fault Finding Sleeve Bearings

12.8.1 Oil Leaks on Sleeve Bearings

Owing to the design of the sleeve bearings it is extremely difficult to prevent oil leaks. Minor leaks can occur.

However, oil leaks can also occur for reasons that are not related to the design of the bearings, e.g.

- Incorrect oil viscosity
- Overpressure in the bearing
- Low pressure outside the bearing
- Heavy vibration on the bearing
- Incorrect servicing, repair
- Oil foaming
- Over filling of the bearing with oil

 Copyright © 2026 Cummins Inc

In case of excessive leaks, check the following aspects:

1. Make sure the oil used complies with the specifications (see **Section 11.5.1.11 on page 99**)
2. Tighten the bearing house halves and the labyrinth seal cover to the related torque. (See sleeve bearing documentation from the manufacturer). This aspect is particularly important after extended alternator standstill.
3. Measure the vibration at the leaking bearing in three directions at full load. If the vibration level is too high, the bearing housing may be open wide enough to allow the oil to flow away between the halves of the housing.
4. Eliminate any causes of low pressure in the vicinity of the bearing. For example a shaft or coupling cover may be designed so that it causes a low air pressure in the vicinity of the bearing
5. Make sure there is no overpressure inside the bearing. Overpressure can enter the bearing via the oil outlet line from the lubrication unit. Provide vents on the bearing housing to relieve the overpressure from the bearing. Also check the vent at the oil supply unit.
6. In case of an external lubrication system, check whether the fall on the oil outlet pipes is adequate.

If it is not possible to correct the leak problem by means of one of the above points, contact the manufacturer.

12.8.2 Oil

For the bearings to function correctly, the oil must meet certain criteria, including viscosity and cleanliness. Only use the oil stipulated by the manufacturer with the correct viscosity. Incorrect viscosity will result in bearing failures and can seriously damage the bearings and the shaft.

12.8.2.1 Sealant

To prevent oil escaping from the bearing through the joints, apply a sealant along the joint. Use Loctite 5926 for this purpose. On the use of biodegradable oils, request information on the compatibility of the oil with the sealant from the sealant manufacturer. Only Hylomar Advanced Formulation HV/Hylomar can be used for floating labyrinth seals. Refer to the documentation from the sleeve bearing manufacturer.

12.8.3 Checking the Bearings

If you suspect that the bearing housing itself is leaking, do the following steps:

1. Re-tighten the bolts of the bearing housing
   - This aspect is particularly important during commissioning or after extended standstill, as the parts may have loosened.
   - If the halves of the bearing housing are not firmly screwed together, the oil may flush the sealant out of the joint.
2. Open the bearing housing
   - You can open the bearing housing and apply new sealant to the joint.
     Make sure that the seals are not damaged when opening the bearing and that no dirt or foreign bodies enter the bearing. De-grease the joint then apply a very thin layer of sealant. See documentation from the sleeve bearing manufacturer. Make sure that no sealant enters the interior of the bearing when assembling the halves of the bearing housing. Sealant that enters the interior of the bearing can degrade the function of the bearing or labyrinth seals. Make sure that the labyrinth seals are sealed according to the manufacturer of the sleeve bearing.

12.8.4 Check on the Oil Tank and the Oil Lines

If you suspect that the leak is caused by the design of the oil tank or the oil lines do the following steps:

Pressure in the oil tank

Check the atmospheric pressure in the oil tank. The pressure must not be higher than the pressure outside the bearing. In case of overpressure, check the vent on the oil tank or fit one, if necessary.

Oil lines

Make sure that the line has an adequate diameter, is not clogged and that the entire oil return line has an adequate downward gradient.

12.8.5 Vibration and Oil

All alternators are subjected to vibration and are designed to withstand this vibration to suit their purpose. However, heavy vibration outside the design specification can result in problems with the function of components other than bearings.

Heavy vibration can affect the oil film between the shaft and the bearing shells and more likely results in bearing failures than oil leaks. Under heavy vibration, parts of the bearing housing may move so far apart that the oil enters the joint between the upper and lower half of the bearing housing. The vibration will also cause the parts of the bearing housing to move in relation to each other. The pumping effect that pumps oil into and out of the joint can flush out the sealant, causing bearing leaks.

12.8.6 Check on Vibration

Measure the vibration on the bearing housing in three directions: axial, transverse (horizontal) and vertical, see **Section 10.4.2 on page 80**.

12.8.7 Hydrostatic System

Possible causes of malfunction:

- The pump motor is faulty or its function is degraded
- The pump pressure is inadequate
- The oil filter is soiled
- The oil flow sensor is not signaling any oil flow, for example in case of intake line fracture

12.8.8 Air Pressure in the Bearing

The bearing housing is not a hermetically sealed unit; overpressure in the bearing housing allows air to escape via the labyrinth seals. As it escapes, the air carries oil vapor with it, and the bearing leaks.

Overpressure in the bearing is normally caused by other components, not by the bearing itself. The most frequent reason for overpressure in the bearing is cavitation in the inlet line or a buildup in the oil outlet line.

12.8.8.1 Check the Air Pressure in the Bearing

Check the air pressure inside and outside the bearing.

The best place to measure the pressure in the bearing is at the oil filter or at the inspection glass for the loose lubrication ring on the top of the bearing.

12.8.9 Air Pressure Outside the Bearing

Similar to overpressure in the bearing, a low pressure outside the bearing will result in the extraction of air containing oil from the inside of the bearing, causing the bearing to lose oil.

Low pressure near the bearing housing is caused by rotating parts that move the air in their vicinity so that there is an area of low pressure at the shaft outlet on the bearing.

 Copyright © 2026 Cummins Inc

12.8.9.1 Check on the Air Pressure Outside the Bearing

⚠ DANGER

Testing on Rotating Mechanical Parts

Rotating mechanical parts can cause serious injury or death by crushing, severing and trapping. To prevent injury and before removing safety covers for testing:

- ***Take applicable precautions to prevent contact with uncovered rotating mechanical parts, refer to Safety Precautions Chapter.***
- ***Test on or near uncovered rotating mechanical parts, only if absolutely necessary.***
- ***Do not test on or near uncovered rotating mechanical parts alone: Additional personnel must be present, who know how to isolate energy sources and take action in an emergency.***

⚠ WARNING

Exposure to Ejected Debris and Particles

Ejected debris and particles can cause serious injury or death by impact, severing or puncturing. Exposure to mechanically driven release of debris and particles exists in all directions (horizontally and vertically) in the areas surrounding the alternator air outlet(s), air inlets(s) and the open shaft end (also commonly known as the Drive End (DE)). To prevent injury or death:

- ***Keep away from the air inlet(s) and air outlet(s) when the alternator is operating.***
- ***Do not position operator controls near the air inlet(s) or air outlet(s).***
- ***Do not cause overheating by running the alternator outside rating plate parameters.***
- ***Do not overload the alternator.***
- ***Do not operate an alternator displaying excessive vibration.***
- ***Do not synchronize parallel alternators outside the specified parameters.***

⚠ WARNING

Exposure to Particles and Fumes from an Alternator.

Particles and fumes can be released in all directions (horizontally and vertically) from where alternator ventilation is installed. To avoid injury:

- ***Avoid the areas around ventilation openings, air intake(s) and air outlet(s) when the alternator is operating.***
- ***Use the correct personal protective equipment when working around an alternator.***

⚠ WARNING

Exposure to Particles and Fumes from Alternator Terminal Boxes.

Particles and fumes can be released in all directions (horizontally and vertically) from where terminal box pressure release flaps are installed. Terminal box pressure release flap(s) can be located at different positions and orientations. To avoid or injury:

- ***Personnel must keep away from terminal box pressure release flap(s) during alternator operation.***

1. Attach measuring instruments/lines with the alternator at standstill.
2. Only measure with the alternator in operation.

3. Never try to correct low pressure in the bearing by installing a vent, as this would further amplify the leak. Check the air pressure in the vicinity of the shaft outlet on the bearing. This aspect is particularly important if the bearing is mounted on the prime mover using a flange of a coupling, or if the shaft is mounted inside a cover or another construction that together with the shaft can cause a centrifugal air flow.
4. If a very low pressure is found or suspected, the air pressure is to be measured in the vicinity of point where the shaft leaves the bearing housing.
5. To be certain that the low pressure outside the bearing may be the cause of the leak, the pressure must also be measured outside the bearing (Pos. 1 and 3 on the DE and Pos. 5, 7 and 9 on the NDE, in the bearing (Pos. 2 on the DE and Pos. 6 on the NDE) and in the area between the bearing plate and the alternator seal (Pos. 4 DE and Pos. 8 NDE). During the measurement (Pos. 4 DE and Pos. 8 NDE) the pipe is to be inserted as deep as possible and the ducts must be temporarily sealed, see Figure: Checking the air pressure inside and outside the sleeve bearing.
6. To analyze the situation, compare the positions 1-4 on the DE with each other and the positions 5-9 NDE with each other. The measurements outside the bearing must be measured free of malfunctions or turbulence in the vicinity of the alternator. The following situations can occur:
7. If all pressures are equal, the leak is not caused by pressure differences.
8. If the pressure in the bearing is higher than the exterior pressure, there is an overpressure in the bearing.
9. If the pressure outside the bearing is lower than the pressure at other points, there is low pressure near the bearing.
10. If all pressures are different, there may be both overpressure in the bearing and low pressure outside the bearing.

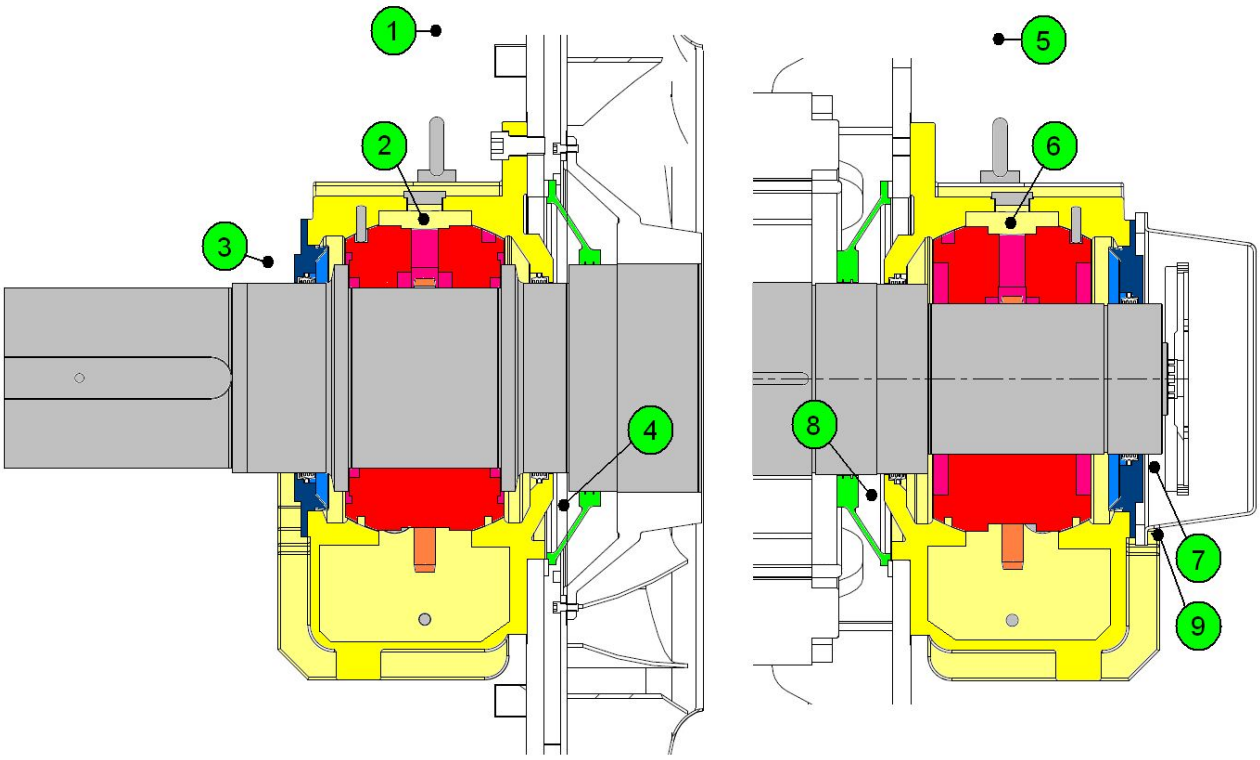

FIGURE 36. CHECKING THE AIR PRESSURE INSIDE AND OUTSIDE THE SLEEVE BEARING (1 - SLEEVE BEARING COVER)

 Copyright © 2026 Cummins Inc

12.9 Electrical Power, Excitation, Control and Protection

The electrical power output of an alternator is determined primarily by the condition of the rotor and stator windings and secondly, by the operation of the excitation system. The main servicing of the alternator winding is described in **Section 11.7 on page 106**. This section concentrates on troubleshooting the excitation, control and protective system.

12.9.1 Triggering the Protective System

The alternator must be protected with alarm and shutdown functions for abnormal electrical or mechanical operating conditions.

Investigate the following events if they trigger an alarm or a protective system:

- Diode failure
- High bearing temperature,
- High temperature in the windings or the cooling air
- Failure of the isolating or matching transformer
- Vibration protection (if fitted)

12.9.2 PT100/PT1000 Resistive Temperature Sensors

PT100/PT1000 resistive temperature sensors are a significant element of the monitoring and protective system for the alternator. They are used to measure the temperature in the stator windings, in the bearings and in the cooling air. The sensors can be damaged by incorrect handling or excessive vibration.

The following symptoms can be indicative of a problem in a PT100/PT1000 sensor:

- Infinite resistance or zero resistance in the PT100/PT1000 sensor
- Loss of the measured signal during or after switching on
- A significant difference in the resistance of an individual sensor to the other sensors

If you suspect that a PT100/PT1000 has failed, check the connection in the terminal box by measuring the resistance at the PT100/PT1000 sensor with the cables disconnected.

If a PT100/PT1000 in the stator is defect, use the spare one. All other defective PT100/PT1000 sensors can be replaced.

12.10 Thermal Performance and Cooling System

Unusual alternator temperature rises are caused by the following reasons:

- The efficiency of the cooling system has dropped and the heat of the alternator can not dissipate
- The alternator itself is generating an excessive amount of heat.

If the temperature of the alternator exceeds the normal values, measures must be taken to determine the reason.

Excessive heat production can be caused by damage to the winding, excessive loading or line asymmetry; in these cases corrective measures on the cooling system are ineffective or will cause damage. If you suspect that the efficiency of the cooling system has dropped or the cooling air temperature sensors are indicating an abnormally high temperature, check the cooling system. Check the following:

- Ensure the air circulation is uninterrupted and free of faults
- For heat exchangers, ensure reliability by means of regular cleaning and function checks.

- Check the air or water flow through the heat exchanger. If the cooler is equipped with an external fan, check its function.

Other causes of an abnormally high temperature are:

- Elevated ambient temperature
- High air or water inlet temperature
- Low air or water flow rate

In addition, malfunctions in the lubrication system or the bearings will result in excessively high bearing temperatures and therefore more heat in the cooling system.

An apparently high temperature can also be caused by a problem with the temperature sensors.

 Copyright © 2026 Cummins Inc

This page is intentionally blank.

13 Service Parts and After Sales Service

13.1 Service Parts for Alternators

The Aftersales department sells genuine service parts for alternators supplied.

Contact your local approved AvK parts stockist, details can be found at:

www.stamford-avk.com

Always state the serial number given on the rating plate for quick processing.

13.1.1 General Information on the Service Parts

The alternators manufactured by Cummins are designed and built for reliable, trouble-free operation. However, a precondition for their freedom from malfunctions is correct servicing and operation. This servicing includes the replacement of parts subject to normal wear .

The amount of wear cannot be predicted with absolute accuracy. The wear rates on the individual components vary widely depending on the application, environment and specific conditions. For this reason check the condition of these parts regularly and keep an adequate number of service parts in stock. These service parts will help to minimize the downtime if they are required. Decide the scope of the parts held in stock based on the importance of the application, the availability of the related service part and the experience of the local maintenance personnel.

Replacement of parts due to normal wear or due to incorrect operation is excluded from the warranty. If two moving surfaces are in contact, they will wear over time. For alternators, the major mechanical wear occurs between the rotating shaft and the fixed parts. The bearing parts, e.g. the anti-friction bearings or the bearing shells and oil lubrication rings in sleeve bearings, wear over time and must be replaced occasionally despite correct lubrication. Other wearing parts are seals, brushes and brush systems that are in continuous contact with the rotating shaft.

The parts mentioned above do not represent a complete list of the mechanical wearing parts. Their actual service life can vary significantly from the calculated service life as a function of the actual operating conditions.

Other types of wear occur due to elevated temperatures, electrical malfunctions and chemical reactions. Wear on the diodes on the rectifier bridge is usually caused by abnormal operating conditions. This is normally a slow process that is heavily dependent on the alternator operating conditions and system malfunctions.

The electrical windings have very good protection against wear, provided the servicing and operating instructions are followed carefully. Do not exceed the correct operating temperature and clean the windings regularly to remove dirt. Winding wear can also be a consequence of electrical malfunctions.

In the stator slots there are PT100/PT1000 temperature sensors for the stator windings; these sensors cannot be replaced and are not available to order.

13.2 Customer Service

Cummins Generator Technologies' service engineers are experienced professionals, trained extensively to deliver the best support possible. Our global service offers:

- On-site a.c. alternator commissioning
- On-site bearing maintenance and bearing condition monitoring
- On-site insulation integrity checks
- On-site AVR and accessories set-up

For details of your nearest service outlet visit **www.stamford-avk.com**.

Always state the serial number given on the rating plate for quick processing.

 Copyright © 2026 Cummins Inc

13.2.1 Customer Service and Warranty

The service department will handle warranty claims. Claims must be notified in writing during the warranty period.

This department will:

- Decide on warranty claims
- Decide on corrective measures
- Provide technical support within the warranty period

14 End of Life Disposal

14.1 General Guidance

When disposing of an alternator, component parts or packaging:

- When processing waste materials obey applicable rules and regulations.
- Process waste in an environmentally responsible manner, reuse, reclaim and/or recycle materials where applicable.
- If necessary, speak to a waste processing company for advice and/or guidance.

14.2 Packaging Material

After the alternator, replacement components or service items have arrived, the packing material must be disposed of.

- Wooden packaging must be recycled. However, wood treated with preservative chemicals must be processed appropriately. **Do not burn chemically treated wood.**
- Plastic packaging must be recycled.
- Paper and cardboard packaging must be recycled.
- Anti-corrosion agents can be removed using a cleaning agent and a cloth. The cloth must be disposed as contaminated waste, refer to **Section 14.4 on page 142**.
- Desiccants/drying agents must be disposed of as hazardous waste, refer to **Section 14.4 on page 142**

14.3 Recyclable Material

Separate items containing recyclable base materials, such as: iron, copper and steel, by removing non-recyclable and/or hazardous materials from alternator components.

- Items containing: iron, steel and copper can now be recycled via specialized material recycling companies.
- Separate the removed material into hazardous waste and non-hazardous waste. Obey applicable rules and regulations.
    - Dispose of any contaminated and/or hazardous materials as hazardous waste, refer to: **Section 14.4 on page 142**.
    - Non-hazardous materials that cannot be reused, re-purposed or recycled can now be processed as general waste.

 Copyright © 2026 Cummins Inc

14.4 Hazardous or Contaminated Waste

⚠ CAUTION

Hazardous Substances

Hazardous substances can cause minor or moderate injury. Prolonged or repetitive exposure to hazardous substances can cause serious medical conditions. To prevent injury:

- ***Always read and obey the instructions provided by the product manufacturer.***
- ***Use, handle and store substances as specified by the product manufacturer.***
- ***Always wear appropriate personal protective equipment, refer to Safety Precautions Chapter.***

Waste materials such as, but not limited to: oil, grease, lubricant, fuel, adhesive, desiccants (drying agents), battery acid, cleaning agent, solvent or corrosive substance, paint, polyester resin and/or plastic residues or articles contaminated with such substances are designated as 'Hazardous Waste' by international regulations.

- Obey applicable rules and regulations when handling, storing, transporting, processing and/or disposing of hazardous waste.
- If necessary, speak to a hazardous waste disposal company for assistance and/or advice in the disposal of hazardous waste or contaminated articles.

STAMFORD | AvK™

POWERING TOMORROW, TOGETHER

Copyright 2026. Cummins Generator Technologies. All rights reserved.
Cummins and the Cummins logo are registered trademarks of Cummins Inc.
STAMFORD®, AvK® , STAMFORD VITA™ , MX321™ and MX322™ are registered trademarks of Cummins Generator Technologies Ltd.