AutoCad

CORE	C OF G (mm)	WEIGHT (KG)
F	500	1160

REL NO	REV	NO	REVISION	DWN	CKD	APVD	DATE
ECO-172258	B	1	ZONE D4,ADDED WEIGHT (1160 KG) FOR F CORE	NK	PN	S_NARAYANAN	21SEP17
		2	IN TITLE BLOCK,DESCRIPTION S4L1S F 2-BRG, SAE NONE, ø80 X 170L, STD T/BOX WAS S4 F 2-BRG STD GA	NK	PN	S_NARAYANAN	21SEP17

NOTE:-
1. CUSTOMER MAY CUT CABLE ENTRY HOLES AS REQUIRED IN ANY OF THE FOUR TERMINAL BOX SIDES SUBJECT TO POSITION OF A.V.R, TERMINALS, ETC.

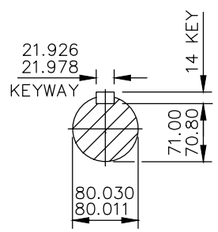

DETAIL OF SHAFT EXTENSION

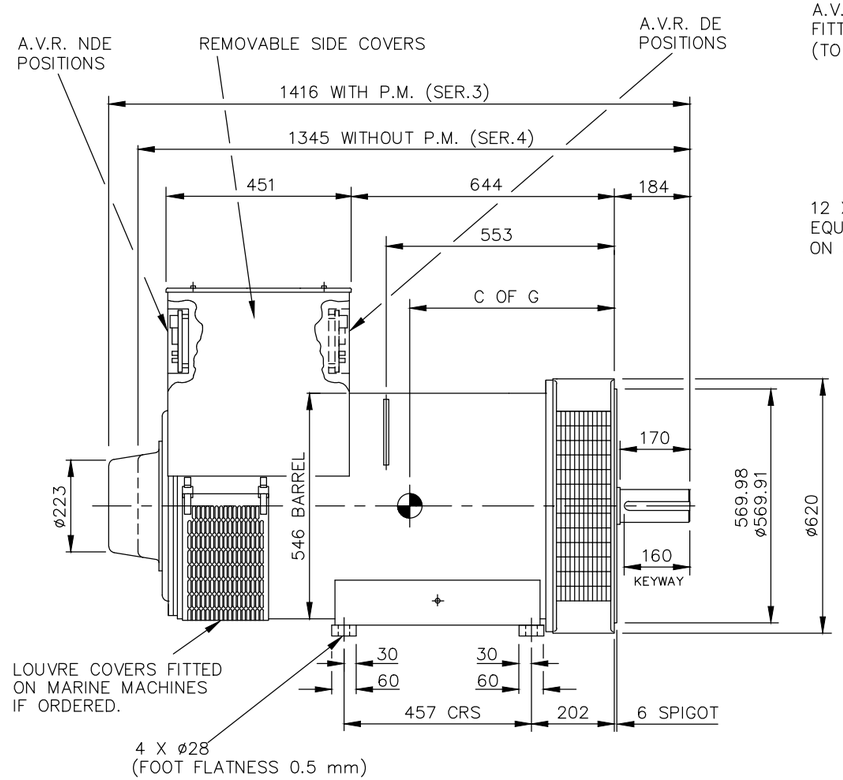

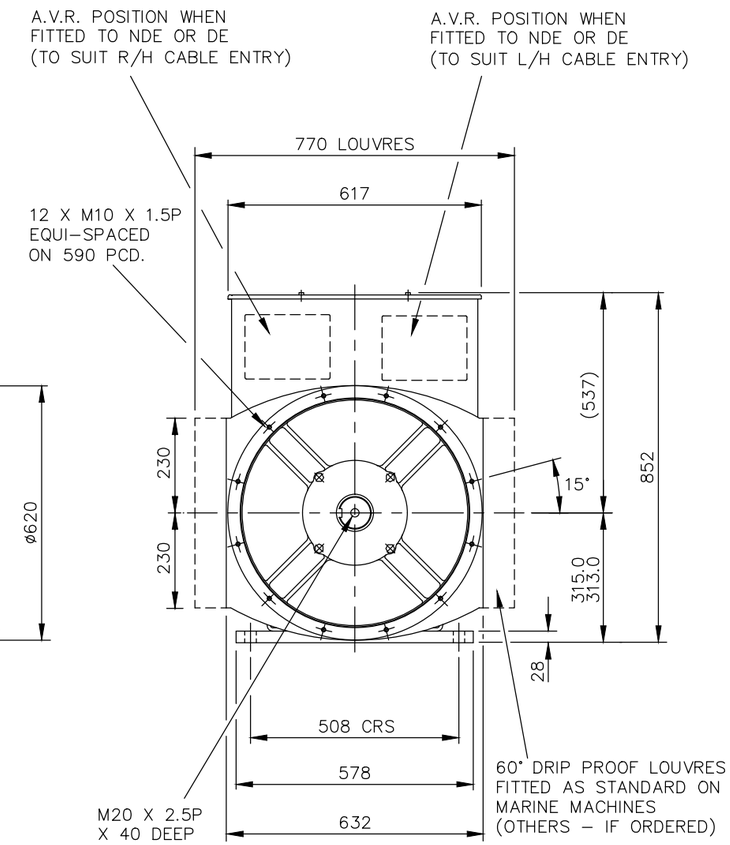

UNLESS OTHERWISE SPECIFIED, ALL DIMENSIONS ARE IN MILLIMETERS	SIM TO 41-4496	DRAWN	P_PACHPUTE
	DO NOT SCALE PRINT	CHECKED	A_BIRARI
SCALE 1:10		APPROVED	B_SURVE
		DATE	14NOV16
THIS DOCUMENT (AND THE INFORMATION SHOWN THEREON) IS CONFIDENTIAL AND PROPRIETARY AND SHALL NOT BE DISCLOSED TO OTHERS IN HARD COPY OR ELECTRONIC FORM, REPRODUCED BY ANY MEANS, OR USED FOR ANY PURPOSE WITHOUT WRITTEN CONSENT OF CUMMINS INC.		FOR INTERPRETATION OF DIMENSIONING AND TOLERANCING, SEE ASME Y14.5-2009	FIRST USED ON S4

CUMMINS GENERATOR TECHNOLOGIES

DRAWING,GENERAL ASSEMBLY

S4L1S F 2-BRG, SAE NONE, ø80 X 170L, STD T/BOX

SITE CODE	DWG SIZE		CAD SHEET
STA	A4	A056N436	1 OF 1