PTC® Creo® Parametric

CORE	C OF G	WEIGHT (KG)
G	662	1780
H	672	1850

DISC COUPLING					
SAE NO	AN	AR	AS	AT	V
14	25.4	8	Ø13.5	438.1	Ø466.67
18	15.87	6	Ø16.7	543	Ø571.45

REL NO	REV	NO	REVISION	DWN	CKD	APVD	DATE
ECO-178649	A	1	PRODUCTION RELEASE	SAU	DGL	K.WEJRZANOWSKI	16JUL18

NOTES:
1.CUSTOMER MAY CUT CABLE ENTRY HOLES AS REQUIRED IN ANY OF THE FOUR TERMINAL BOX SIDES SUBJECT TO POSITION OF AVR, TERMINAL,ETC

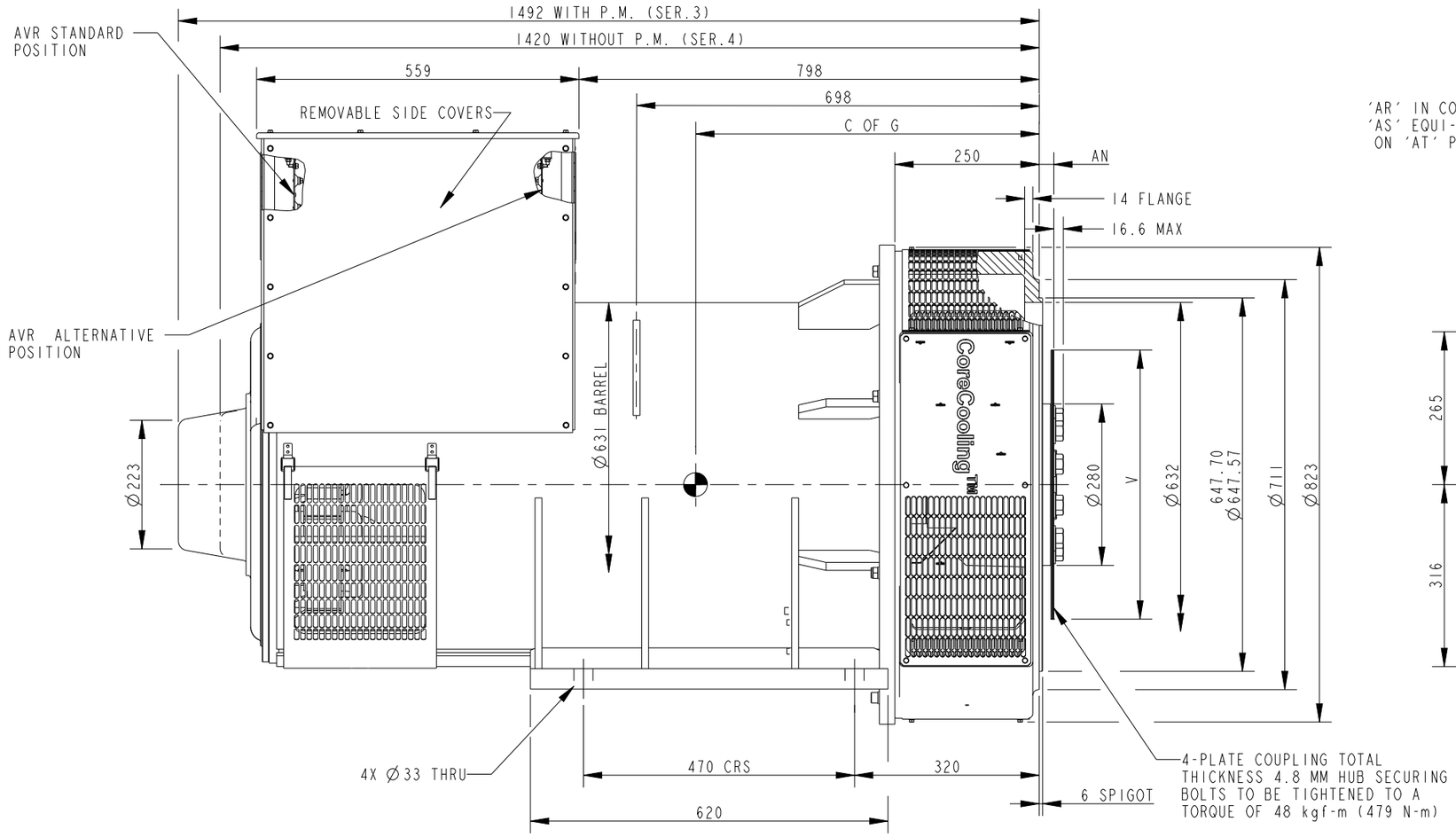

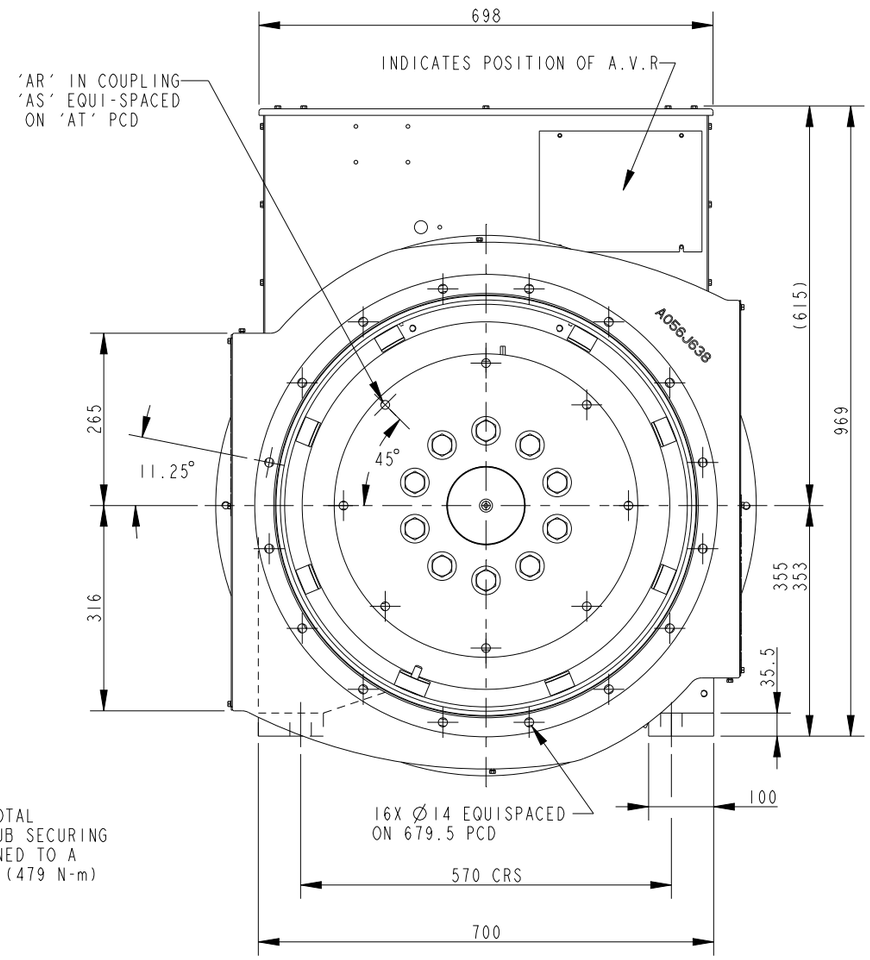

UNLESS OTHERWISE SPECIFIED, ALL DIMENSIONS ARE IN MILLIMETERS	SIM TO A056V147	DWN S.UGALE	Cummins®	CUMMINS GENERATOR TECHNOLOGIES
	DO NOT SCALE PRINT	CKD D.LEE		DRAWING,GENERAL ASSEMBLY
SCALE 0.150		APVD K.WEJRZANOWSKI	SITE CODE	S5LID GH IB SAE0-14/18 STD FOOT & TB
		DATE 16JUL18		
THIS DOCUMENT (AND THE INFORMATION SHOWN THEREON) IS **CONFIDENTIAL AND PROPRIETARY** AND SHALL NOT BE DISCLOSED TO OTHERS IN HARD COPY OR ELECTRONIC FORM, REPRODUCED BY ANY MEANS, OR USED FOR ANY PURPOSE WITHOUT WRITTEN CONSENT OF CUMMINS INC.		FOR INTERPRETATION OF DIMENSIONING AND TOLERANCING, SEE ASME Y14.5-2009	FIRST USED ON S5	STA	DWG SIZE A2	A060Z453	CAD SHEET 1 OF 1