STAMFORD | AvK ™

POWERING TOMORROW, TOGETHER

Application Guidance Notes: Technical Information from STAMFORD | AvK

AGN 055 - Arc Furnaces

INTRODUCTION

An electric arc furnace (EAF) is a furnace that heats charged material by means of an electric arc. Industrial arc furnaces range in size from small units of approximately one ton capacity (used in foundries for producing cast iron products) up to about 400 ton units used for secondary steelmaking.

DESCRIPTION

A major advantage of the use of EAFs allows steel to be made from a 100% scrap metal feedstock. This greatly reduces the energy required to make steel when compared with primary steelmaking from ores. Another benefit is flexibility: while blast furnaces cannot vary their production by much and can remain in operation for years at a time, EAFs can be rapidly started and stopped, allowing the steel mill to vary production according to demand. Although steelmaking arc furnaces generally use scrap steel as their primary feedstock, if hot metal from a blast furnace or direct-reduced iron is available economically, these can also be used as furnace feed. As EAFs require large amounts of electrical power, many companies schedule their operations to take advantage of off peak electricity pricing.

A typical steelmaking arc furnace is the source of steel for a mini-mill, which may make bars or strip product. Mini-mills can be sited relatively near to the markets for steel products, and the transport requirements are less than for an integrated mill, which would commonly be sited near a harbour for access to shipping.

ARC FURNANCE ENVIRONMENT

Although the modern electric arc furnace is a highly efficient recycler of steel scrap, operation of an arc furnace shop can have adverse environmental effects. Much of the capital cost of a new installation will be devoted to systems intended to reduce these effects, which include:

- Enclosures to reduce high sound levels
- Dust collector furnace off-gas
- Slag production
- Cooling water demand
- Heavy truck traffic for scrap, materials handling, and product
- Environmental effects of electricity generation

Because of the very dynamic quality of the arc furnace load, power systems may require technical measures to maintain the quality of power for other customers; flicker and harmonic distortion are common side-effects of arc furnace operation on a power system. For this reason the power generation plant should be located as close to the EA furnaces as possible.

ALTERNATOR SELECTION

The two types of arc furnace in common use are:

- Three-phase furnace
- Single phase furnace

The general field of the three phase furnace is the production of alloy steels. That of the single phase furnace, the production of non-ferrous alloys. Also, there is an increasing use of both types of furnace for the manufacture of high quality gray-iron castings. To fully understand the load demands and environmental protection for the selection of a suitable alternator, refer to the section on arc furnaces on the following pages. This extract is taken from the text book “Standard Handbook for Electrical Engineers - Process of Electrical Input Characteristics”, and provides comprehensive guidance.

Application Engineering are able to offer guidance on specific Arc Furnace applications.

production of alloy steels; that of the single-phase furnace, the production of nonferrous alloys. Also, there is an increasing use of both types of furnace for the manufacture of high-quality gray-iron castings.

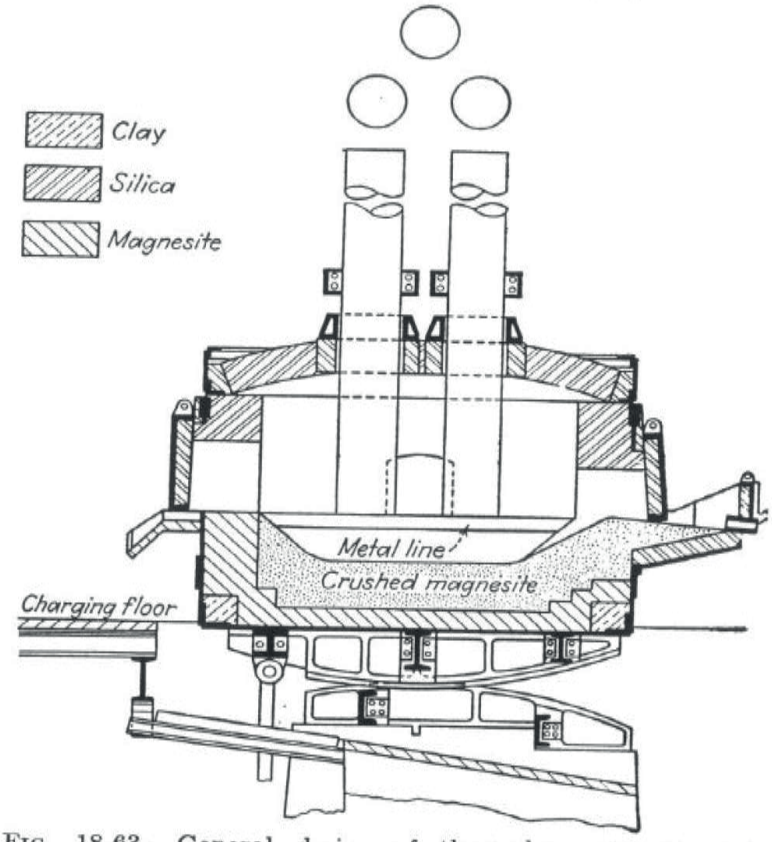

FIG. 18-63.—General design of three-phase arc furnace. Basic lining.

158. Three-phase Arc Furnace. Standard sizes of these furnaces range from 250 to 10,000 kva; loading range, 500 lb to 50 tons. Sizes 1,000 to 2,000 kva predominate.

The design of the three-phase furnace is shown in Fig. 18-63. The chamber is a steel bowl with a refractory lining. The hearth is a shallow bowl formed in the bottom lining. The roof is a removable dome-shape refractory structure carried on a steel roof ring. The roof has three round ports in equilateral triangular arrangement through which vertical carbon or graphite electrodes travel. Each electrode is carried on a winch-and-rope system, motor driven. The supports for the electrode mechanism may or may not be attached to the furnace shell. The structure of the furnace is mounted on a tilting mechanism for pouring the molten metal through the door opening in the side of the shell.

Refractories. The chemical nature of the slag, acid or basic, determines the required chemical nature of the lining of the hearth and side wall of the chamber up to a few inches above the top surface line of the slag; *i.e.*, an acid refractory (silica) for acid slags, and a basic refractory (magnesia) for basic slags. The roof is usually made of silica brick. Silica has a tendency to spall during heating and cooling, and furnaces which are in intermittent use often have roofs made of fire-clay brick. The two types of refractory lining are shown more clearly in Fig. 18-64.

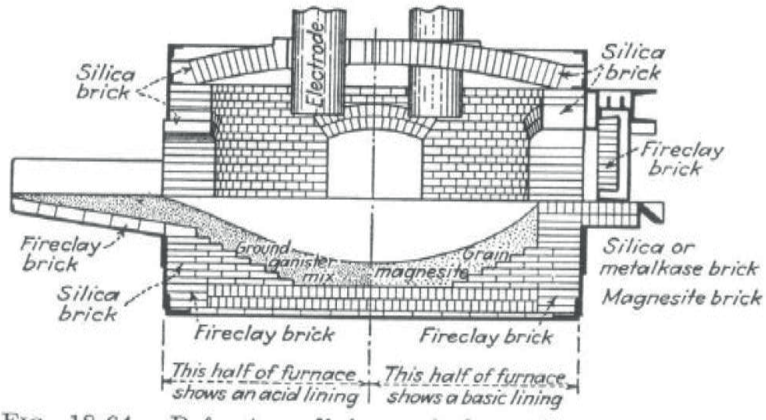

FIG. 18-64.—Refractory linings of three-phase arc furnace. (*Harbison-Walker Refractories Co.*)

Temperature. The operating temperature of the chamber is limited by the softening point of the refractory, particularly that of the roof, where there is a natural concentration of heat. A refractory material can be operated with the temperature of its inner face close to its softening point provided the outer face is exposed to the open air, thus permitting a flow of heat through the refractory body. A temperature gradient is thus established in the refractory so that if its thickness is correctly related to its thermal conductivity the mean temperature of the refractory body will not be high enough to impair its strength materially.

The temperature of molten steels is around 1600 C (2912 F). The melting point of silica is 1713 C (3115 F), but the softening point of a silica refractory is somewhat lower because of impurities in the refractory body. Hence, in a steel melting furnace the temperature of the inner face of the refractory lining is too high to permit the use of heat insulation. Even a thick coat of dust on the roof of a melting furnace is undesirable.

159. The designation of a three-phase arc furnace may be given as: the holding capacity, shell diameter, pouring capacity, melting rate, or a combination of these terms. A given diameter of shell can be adapted to a range of ratings by varying the thickness of the refractory lining. Sizes are given in Table 18-17.

Table 18-17. Representative Sizes of Three-phase Arc Furnaces in General Use

Shell diameter	Normal charge, lb	Transformer rating, kva	Lb per hr single slag heats
4 ft	800–1,000	250–350	500
4 ft 6 in	1,200–1,500	350–500	900
5 ft	1,500–2,000	500–750	1,300
6 ft	3,000–4,000	750–1,000	2,000
7 ft	5,000–6,000	1,000–1,500	3,000
8 ft	7,000–9,000	1,500–2,000	4,500
9 ft	10,000–12,000	2,000–3,000	6,000
10 ft	16,000–20,000	2,500–3,000	10,000

Method of charging:

Sizes: 4 and 4 ft 6 in	Hand
Sizes: 5 and 6 ft	Hand or chute
Larger sizes	Hand, chute, or top charging

160. Charges. The three-phase arc furnace is primarily a scrap-metal conversion unit. The two types of furnace with respect to the method of charging are (*a*) the door-charge type and (*b*) the top-charge type. Depending upon the character of the scrap, hand charging and chute charging are the usual methods for small furnaces. Large furnace installations are often equipped with side-door charging machines. Top charging is growing in favor for medium-size furnaces. In this method the roof of the furnace is removed, and a complete charge is placed in the chamber by a drop bucket handled by an overhead crane. This is both a time-saving and a labor-saving method. The charging time is only a few minutes, *e.g.*, a reduction from 30 to 5 min. Top charging has the other advantages of a full chamber and a lower heat loss during the charging period.

Some three-phase arc furnaces are used for refining service only. Molten metal from an open-hearth furnace, Bessemer converter, or cupola is the charge.

The weight of scrap metal varies with the degree of its subdivision. See the following table. The weight of charge that can be placed in a given furnace thus depends on the kind of scrap. If sufficient scrap metal cannot be placed in the furnace initially to form the weight of molten metal desired, additional quantities can be added later in the heat cycle. That practice affects adversely to some extent both the operating efficiency and the consumption of electrodes.

Approximate Weight of Scrap Iron and Steel

Kinds of Scrap	Lb/Cu Ft
Sprues, gates, and risers	70– 90
Borings and turnings	100–150
Small miscellaneous scrap	200
Large scrap	300

161. Electrodes. The arc in each phase is maintained between the tip of the electrode of that phase and the charge (bath after the molten state is reached). The

charge thus serves as a common electrode for the three arcs and makes a Y connection of the three-phase circuit at that point. The designation "direct-arc furnace" refers to this arrangement.

The trend is toward the general use of graphite electrodes. Carbon electrodes are preferred in some cases. Standard sizes and the corresponding current ratings are given in Tables 18-18 and 18-19.

The consumption of electrodes is caused largely by volatilization and burning. There is some breakage. Graphite begins to oxidize at about 600 C; carbon, at about 400 C. Under average conditions the consumption of graphite electrodes is about one-half that of carbon electrodes. Average values for melting service, pounds of electrode per ton of metal melted, are: graphite, 4 to 10; carbon, 8 to 15. The corresponding consumption in melting-refining service is about 10 lb for graphite and 18 lb for carbon.

Table 18-18. Approximate Current-carrying Capacities of Graphite Electrodes for Arc Furnaces

Nominal diameter, in.	Amperes	Nominal diameter, in.	Amperes
2	600–1,000	9	6,400–10,800
2½	800–1,500	10	7,800–12,500
3	1,200–2,100	12	11,300–17,000
4	1,800–3,000	14	15,400–21,500
5½	2,300–4,100	16	20,100–26,100
6	3,100–5,400	17	22,700–28,400
7	4,200–6,900	18	25,500–30,500
8	5,500–9,000	20	28,300–34,600

Table 18-19. Approximate Current-carrying Capacities of Carbon Electrodes for Arc Furnaces

Nominal diameter, in.	Amperes	Nominal diameter, in.	Amperes
8	2,000– 3,000	20	11,000–17,300
10	3,000– 4,800	24	15,800–24,800
12	4,500– 6,800	30	24,700–35,300
14	5,400– 8,500	35	28,800–38,400
17	7,900–12,500	40	37,700–50,200

162. Selection of size of furnace for foundry service is based on several factors, *viz.*, average production, maximum and minimum production, casting facilities, weights of castings, power supply, rate schedule. For continuous use, a large unit is more efficient than two or more small units. However, operating a large unit for small production is not economical. Two sizes of furnace may be the better arrangement. Similar considerations prevail in the size selection of furnaces for ingot production, although the operating conditions are somewhat different.

The more exact procedure possible with the comparatively small charges of arc furnaces is responsible to a considerable extent for the continuous growth of that furnace for making alloy steels, both castings and ingots. The term "electric steel" is the accepted designation of a uniform and high-quality product.

163. A typical performance of a medium-size furnace in foundry practice (acid process) is given in the table.

THREE-PHASE ARC FURNACE

Diameter of shell	6 ft
Range of loading	2–4 tons
Electrical rating	1,000 kva
Weight per heat	4,000 lb
Time of first heat	2–2½ hr
Average time of succeeding heats	1¾–1½ hr
Number of heats per 10-hr day	6–7
Average kwhr per ton of molten steel	540
Tons of molten metal per day	12–14

164. The volt-ampere characteristic of the arc is negative (curve *A*, Fig. 18-65), and a stabilizing element (curve *B*, reactance for an a-c arc) is necessary for circuit

stability (curve C). Reactance also serves to limit the current in the circuit when an electrode touches the charge. This reactance is the total reactance of the circuit from the furnace terminals to the point in the power system where the voltage is held constant. Thus a furnace at the end of a long feeder is a different problem from a furnace installed adjacent to a large substation.

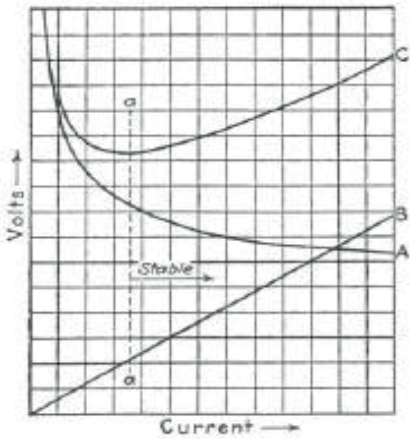

FIG. 18-65.—Volt-ampere characteristic of arc in air.

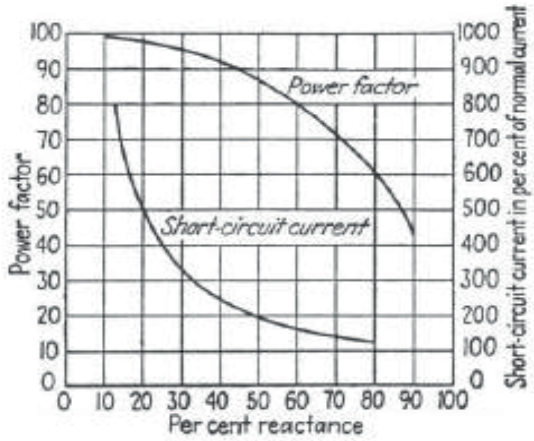

FIG. 18-66.—Effect of series reactance with straight-line characteristic on the power factor and short-circuit current of an arc-furnace circuit.

The operation of an arc furnace is dependent on the stabilizing element of the circuit only to the extent of insuring continuity of operation. The limitation of current fluctuations is a problem of power service and is individual for each location. The chart of Fig. 18-66 is based on reactance only. The resistance of the circuit is also a factor, and the actual value of the short-circuit current will be less than that indicated.

165. Circuit Characteristics. The arc-furnace circuit (containing resistance and reactance) is operated at constant voltage and supplies a unity-power-factor load, the arc or arcs. The characteristics of this type of circuit for a given applied voltage are shown in Fig. 18-67. The maximum power in the circuit occurs at 0.707 power factor. The maximum power in the arc occurs at a higher power factor of the circuit, a value dependent on the constants of the circuit.

The optimum current value is

$$i_{\text{opt}} = \frac{e}{\sqrt{2}\,x}\sqrt{1 - \frac{r}{z}} \quad \text{(amp)} \qquad (18\text{-}49)$$

The corresponding value of the maximum power in the three arcs of a three-phase furnace is

$$p_{\max} = \frac{3e^2}{2(z + r)10^3} \quad \text{(kw)} \qquad (18\text{-}50)$$

The power factor of the circuit corresponding to the optimum current is

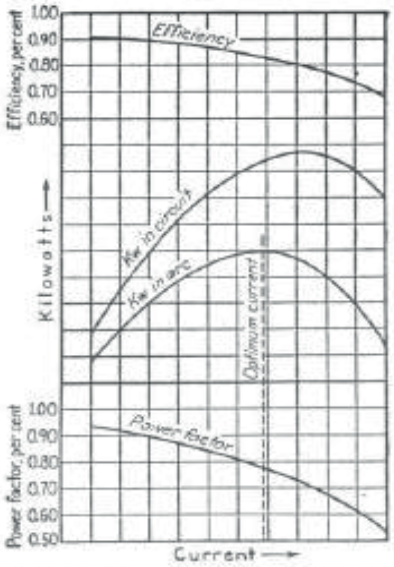

FIG. 18-67.—Characteristics of an arc-furnace circuit.

$$\cos\varphi = 0.707\sqrt{1 + \frac{r}{z}} \qquad (18\text{-}51)$$

where e = applied voltage, r = resistance of the circuit in ohms, x = reactance of the circuit in ohms, z = corresponding impedance. All are phase-to-neutral values, counting from the point in the power system where the voltage is held constant.

There is an individual optimum current value for each value of voltage applied to a given circuit as shown by Fig. 18-68.

The slope of the power-current characteristic on each side of the optimum current value is small, and the term means practically a range of current values below and above the actual optimum current. This value of current relates only to the circuit characteristics. Some value of current lower than the optimum value for a given applied voltage may give the desired power in the arcs. A common error in the operation of furnaces is the use of current values higher than the optimum value.

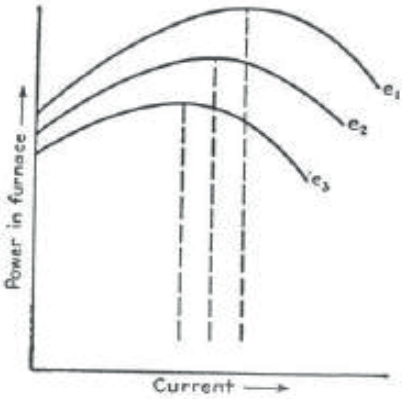

FIG. 18-68.—Relation of optimum-current values and voltage.

The values of optimum current and maximum power for a given voltage can usually be determined by trial toward the end of a heat when the circuit is stable and balanced.

166. Electrical Apparatus. The rating of the electrical equipment of a three-phase arc-furnace installation varies for a given-size furnace with the class of service and in some cases according to the power-service conditions. The electrical equipment includes:

(*a*) A variable-ratio power transformer.
(*b*) Reactors if required.
(*c*) An automatic current regulator.
(*d*) A control panel for the operator.
(*e*) Electrode motors and tilting motor.
(*f*) A main-line circuit breaker and disconnecting switches.

167. Transformers. The features which distinguish the arc-furnace transformer from the conventional power transformer are:

(*a*) Individual service.
(*b*) No requirement of regulation.
(*c*) A wide range of comparatively low secondary voltages and correspondingly high secondary currents.

The power-time relation of a melting furnace—batch operation—is a declining characteristic corresponding to the decreasing temperature gradient within the chamber as the charge of metal passes from the solid to the molten state. At the end of the melting period the power required is the practically constant value of the rate of heat loss from the furnace. This continues until the metal is poured.

The input of power to the furnace is proportional to the square of the applied voltage. Hence, the applied voltage should be reduced as the heat cycle progresses to follow the decreasing temperature gradient. This ideal procedure is approached in practice by multiple-voltage operation. Practice during the past few years for new installations has been four operating voltages. The trend is to increase this number.

There is considerable variation in arc-furnace service. Hence, furnace transformers have a range of voltage taps for the selection of the operating voltages found to be best suited in each case.

The maximum secondary voltage (line-to-line open-circuit voltage) of three-phase, arc-furnace circuits seldom exceeds 275 volts; this limit is fixed because of insulation and safety considerations. A maximum voltage within the range 200 to 250 is common practice.

A typical specification for a three-phase arc-furnace transformer includes an extended primary winding with taps therein for the secondary voltage range, 235-220-205-190-175-160 volts, with the primary winding connected in delta. This voltage range is extended by changing the connections of the primary windings from delta to Y to give 58% voltage from each tap.

An example of operating voltages from the range of taps cited is 235-205-175-118 volts. The last named voltage is obtained from the 205-volt tap by using the Y connection of the primary winding.

The rating of a variable-ratio transformer is proportional to the product of the maximum secondary voltage (open-circuit value) and the maximum secondary cur-

cent. Full-rated capacity at the three highest secondary voltages is usually sufficient. With the primary windings changed to the Y connection, the kva rating of each voltage tap is 58% of its rating for the delta connection.

Depending on the size of the transformer, there may be one, two, or more secondary coils per phase. The bar leads from these coils extend through the transformer tank, plus and minus arrangement, for the completion of the three-phase connection outside the tank. Delta connection is standard practice for the secondary circuit.

The three-phase, water-cooled transformer is the preferred type. Self-cooled units and forced-oil-cooled units are used to some extent. Space and weight limitations in some cases make three single-phase units necessary.

168. Reactance. The performance of arcs in metal-melting furnaces is illustrated by oscillograms by Clark (10c, Bibliography, Par. **237**). At the start of a heat the charge is cold, and the carbon-metal arc is erratic. Within a short time the conditions are much improved by the entrance of metal vapor into the arc stream, and the circuit becomes stable to a degree dependent on its reactance.

The performance of a furnace circuit during the initial period of a heat can be improved by the use of one of the lower operating voltages during the starting period.

There are no criteria for stability and current limitation in arc-furnace circuits, and hence no standard values of reactance in these circuits. As a rule, from 40 to 60% reactance is satisfactory.

The inherent reactance in the circuit of a large furnace 5,000 kva and larger may be and usually is sufficient for the need. As the secondary voltage is fixed by conditions other than the kva rating of the circuit, the smaller installations require more or less supplemental reactance. The values of supplemental reactance given in the next table represent average practice for 60-cycle circuits. (Per cent reactance denotes the per cent reactive voltage drop in the circuit with rated current.) This reactance is added by reactors in the primary circuit.

Transformer Rating, Kva	Supplemental Reactance, Per Cent (Rating of Reactors)
Up to 1000	35–40
1001–2000	30–35
2001–3000	25–30
3001–4000	20–25
4001–5000	10–20

The normal reactance of 60-cycle furnace transformers ranges from 5 to 7%. Reactance values higher or lower—in each case within certain limits—than the range

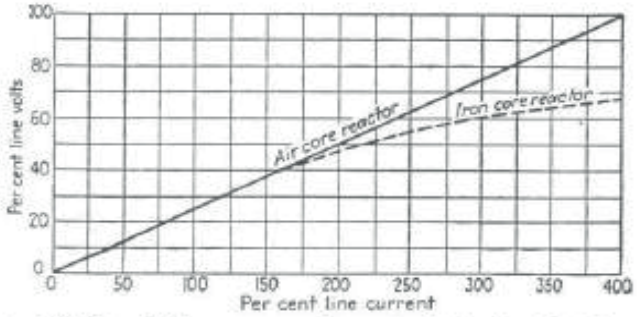

FIG. 18-69.—Volt-ampere characteristic of a 25% iron-core reactor and corresponding air-core reactor.

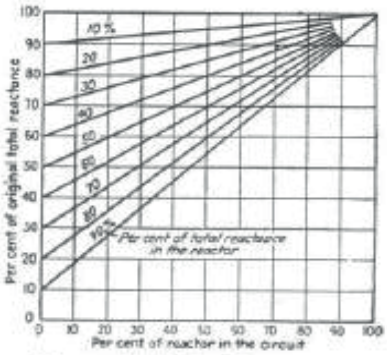

FIG. 18-70.—Percentage of reactor to be left in the circuit for a given percentage of the original total reactance.

noted can be obtained by design but may entail a sacrifice one way or another in the design of the transformer. Hence, it is considered better practice to use a normal design of transformer and to add supplemental reactance, if needed, by reactors.

Iron-core reactors mounted inside the transformer tank for supplemental reactance if required are standard practice. The characteristic of this type of reactor for this

service, along with the straight-line characteristic of an air-core reactor for comparison, is shown in Fig. 18-69.

Reactors should have a number of taps for adjustment after installation. The chart of Fig. 18-70 gives the percentage of the reactor to be left in the circuit for a given reduction in the total reactance of the circuit. For example, with a 50% reactor to reduce the total reactance of the circuit to 70% of its original value, 40% of the reactor winding is retained in the circuit.

The transformer taps and the reactor taps are connected to a common terminal board so arranged that any combination of transformer taps and reactor taps can be made for each of the selected operating voltages.

169. The diagram of Fig. 18-71 illustrates a tap arrangement and switching arrangement for four operating voltages and the use of reactor windings for both the delta and the Y connection.

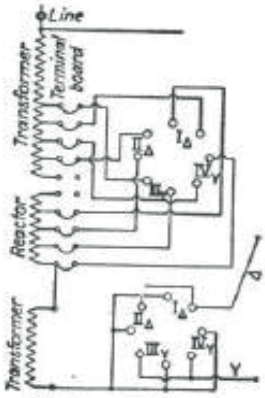

FIG. 18-71.—Diagram for four operating voltages. One phase only of a three-phase transformer.

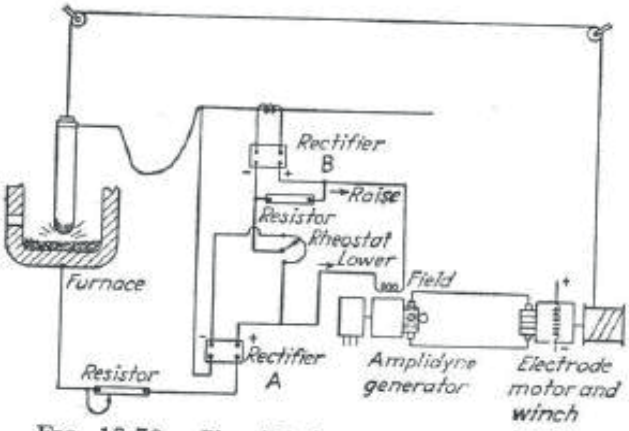

FIG. 18-72.—Simplified circuit diagram of continuous-type automatic current regulator for three-phase arc furnace. One phase only.

An example is the connection of one installation given in the table.

FOUR-VOLTAGE OPERATION OF A THREE-PHASE ARC FURNACE

Switch position	Connection of primary windings	Reactor taps	Voltage taps
I	Delta	30%	220
II	Delta	20%	180
III	Y	10%	235/136
IV	Y	0	200/116

170. Automatic Current Regulator. By reference to Fig. 18-67 it is noted that a change of current causes a change in the power of an arc-furnace circuit. Within the limits of circuit stability the current with a given applied voltage can be changed by changing the length of the arc. This is the principle of the power regulation of arc furnaces.

The intermittent-type current regulator, which operates within present limits of current variation, has been superseded almost entirely by the continuous-type current regulator.

A simplified diagram—one phase only—of the continuous-type regulator is shown in Fig. 18-72. The principle of operation is the opposition of a voltage *B* derived from the circuit of the arc by a reference voltage *A*. The resultant value of these two voltages determines the polarity of the generator that drives the electrode motor. Thus the length of the arc—and correspondingly the current in the arc—is maintained at a predetermined value.

Each phase of the three-phase circuit is regulated independently. However, because of the common electrode, the charge, or both, the three elements of a three-phase

regulator work together for the maintenance of equal currents in the three circuits of the power system.

The automatic regulator performs three other functions:

(*a*) The feeding of the electrodes at the rate of consumption.

(*b*) The removal of partial short circuits caused by the electrodes coming into contact with the charge.

(*c*) The protection of the equipment in case of a failure of the power supply.

171. Operator's Panel. The standard equipment consists of three ammeters, a polyphase wattmeter, a voltmeter, and the necessary rheostats and switches for the operation of the furnace.

172. The electrode drive is a reversing service—rapid at certain times—and a motor with a low WR^2 effect is desirable.

173. The main-line circuit breaker serves both as a protective device and as a switch. The switching service is many times per day. In normal operation the arc circuit is opened by raising the electrodes so that the circuit breaker opens the magnetizing current of the power transformer.

All changing of taps is done with the main-line circuit breaker open (no-load tap changing). The tap-changing switch is interlocked with the circuit breaker to prevent incorrect operation. As a rule, the tap-changing switch is mounted inside the tank of three-phase transformers and outside when three single-phase units are used. The tap-changing switch can be motor operated or hand operated; the former is more general practice.

174. Single-phase Arc Furnaces. The most common single-phase arc furnace is the automatic-rocking furnace. See Fig. 18-73. This furnace is used extensively for melting both ferrous and nonferrous metals and alloys. Standard sizes extend up to and include 600 kw rating for melting 4,000 lb of cold-steel scrap in 90 min.

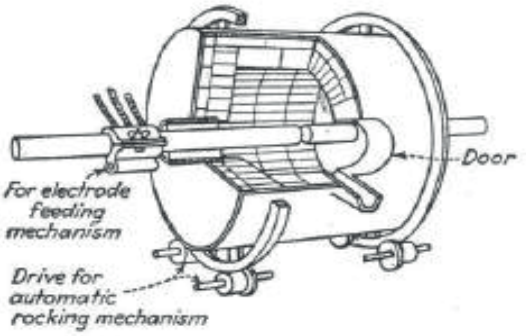

FIG. 18-73.—General design of single-phase rocking arc furnace.

175. Typical performance of the rocking-arc furnaces in brass-foundry service is represented by the following record of melting:

Charges	1,000 lb red brass
Operation	8 to 9 hr per day
Melting time, average	30 min
Pouring temperature	1200–1230 C (2192–2246 F)
Production, 8 to 9 hr	12,000 lb
Operating efficiency	290 kwhr per ton
Electrode consumption	3¼ lb per ton
Metal loss	½ of 1%

176. The load characteristics of the single-phase arc furnace are similar to those of three-phase arc furnaces. However, as there is no arc between an electrode and the charge, the initial performance of the single-phase furnace is somewhat better than the initial performance of the three-phase arc furnace. The average power factor of the single-phase furnace is from 70 to 80%.

Transformer kva	Holding capacity, scrap iron	Maximum swing, kva
190	350 lb	400 at 0.40 pf
525	½ ton	1,000 at 0.40 pf
875	1½ ton	1,500 at 0.40 pf

The accompanying data pertaining to the rocking-arc furnace are from the paper by Clark,[10c] which contains oscillograms of the operation of this furnace.

177. Electrical equipment for single-phase arc furnaces is similar to that of three-phase arc furnaces. Usually only one operating voltage is used.

178. Gray iron with uniform structure and high engineering properties, *viz.*, tensile, bending, shearing, and impact strength, is produced in arc furnaces. The

[10c] Refer to Bibliography, Par. **240.**

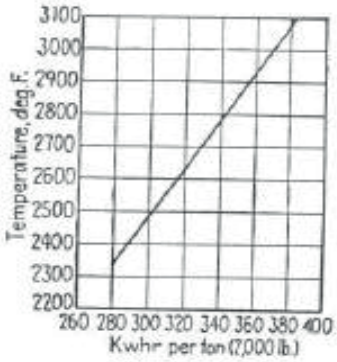

FIG. 18-74.—Heat content of molten gray iron.

method of production involves superheating the iron after melting to about 1600 C (2912 F) and holding it at the elevated temperature for a brief period of time. Gray irons with a tensile strength of 40,000 psi are produced regularly by this method.

With a comparatively large and continuous production of gray iron, say 25 tons per day and more, it is practicable to combine melting in a cupola and heat treating the molten metal in an arc furnace, *i.e.*, duplexing. When the production rate is too low to warrant duplexing, the arc furnace can be used for either continuous cold melting (periodic charging of cold metal and tapping) or batch melting.

Heat absorbed by the iron for melting only is about 270 kwhr per ton. The total heat-absorption values for temperatures above the melting point are given in Fig. 18-74.

A record of an arc furnace in the production of the high-quality gray iron by batch melting is given in the adjoining table.

Heat No.	Time per heat (includes time for charging and pouring)	Kwhr per ton
1	2 hr 35 min	670
2	2 hr 30 min	550
3	2 hr 25 min	520
4	2 hr 20 min	520
5	2 hr 20 min	520
	Average	556

NOTE: The higher rates of the first two heats were caused by the absorption of heat by the refractory lining of the furnace.

In the duplexing method the amount of energy required for the second stage of the process, *i.e.*, superheating, depends on the entering and leaving temperatures of the molten metal, the conversion efficiency of the furnace, length of holding period, etc. The value ranges in practice from 50 to 150 kwhr per ton; a fair average is 100 kwhr per ton.

The energy added for superheating molten gray iron serves the same purpose of betterment of the engineering properties of the iron as alloy additions in the production of alloy cast iron.

INDUCTION FURNACES

179. Two types of metal-melting furnace that embody the induction principle are:

(*a*) The coreless (or high-frequency) furnace.

(*b*) The submerged resistor furnace.

180. Coreless Induction Furnace.[11] The general design of this furnace is shown in Fig. 18-75. The assembly consists of three main parts: (*a*) the primary coil, (*b*) the refractory container, and (*c*) the frame which includes supports and a tilting mechanism.

The distinctive feature of this furnace in common with other assemblies for induction heating is the absence of a continuous iron path for the magnetic flux. Another feature for comparison with other types of melting furnace is the small quantity of refractory material in the construction.

Standard preformed crucibles are used for the smaller furnaces, up to about 500 lb holding capa-

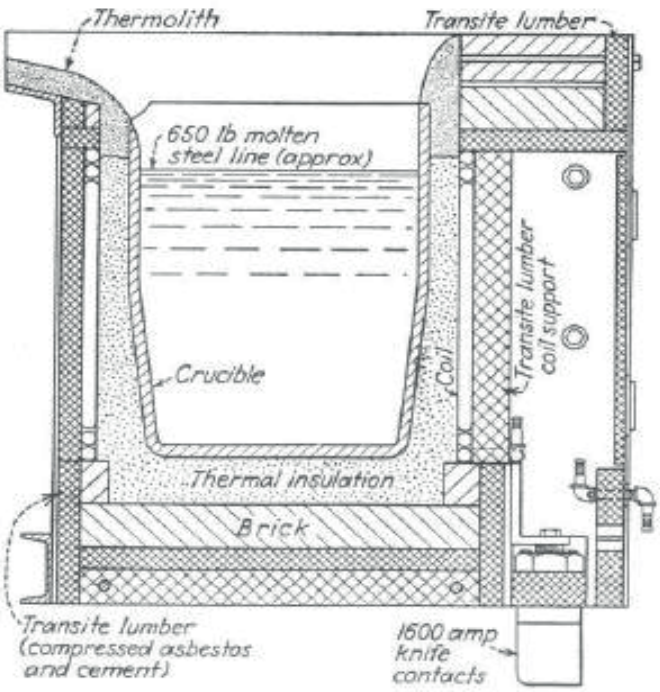

FIG. 18-75.—Coreless induction furnace.

[11] Refer to Bibliography, Par. **240**.

factor of a coreless furnace may be as low as 0.1 and coil voltages are correspondingly high. Power factor correction and a 3-phase balancing network are normally necessary for large loads.

As the frequency is increased, the optimum furnace diameter decreases. Commonly used frequencies are 50 Hz from the mains supply, and harmonics at 150 Hz, 450 Hz and 550 Hz. Frequencies from 50 Hz to 50 kHz are now obtained from static inverters. Frequencies of 50–450 kHz from radio frequency oscillators are also used in the melting of small quantities (a few kilograms) of precious metals. At 50 Hz a molten heel of one-quarter to one-third of the furnace volume is often left, to ensure good coupling when the furnace is recharged: this is particularly useful when fine scrap, e.g. turnings and borings, is used. At frequencies above 50 Hz the furnace is easier to start from cold and it is not necessary to use a starting plug or to leave a molten heel.

The flow pattern in the melt is shown in *Figure 21.20*. Stirring is

TAKEN FROM ELECT. ENGRS REF BOOK.
A 1990 BOOK WHICH COVERS DIRECT & INDIRECT ARC FURNACE PROCESSES.
NOT VERY HELPFUL WITH INPUT CHARACTERISTICS.

21.8.4 Electric arc furnaces

The electric arc furnace, dating back to the end of the last century, is an early example of electric heating. Heating occurs primarily by radiation from the arc and from the ends of the electrodes. Of the various designs of furnace developed, the 3-phase direct arc furnace is most widely used.

21.8.4.1 Direct arc furnace

The direct arc furnace, used for producing low-carbon steels from scrap, has almost totally replaced the open-hearth furnace. It is of very robust construction, with the hearth dish-shaped and shallow (*Figure 21.21*), to enable high heat transfer rates and effective slag reactions to be obtained. Bath diameters up to 7 m and charge capacities of more than 400 t are used. Electromagnetic stirring may be incorporated by using a non-magnetic steel shell and incorporating a low-frequency stirring coil below the furnace bath. The entire structure, including electrodes, masts, etc., is normally mounted on a hydraulically operated rack and pinion enabling it to be tilted in one direction for pouring and

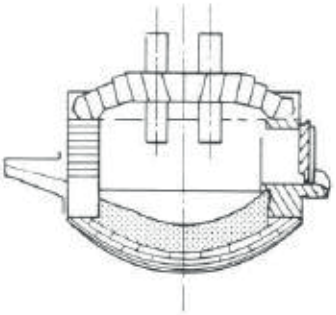

Figure 21.21 Direct arc furnace

in the reverse direction for slagging. The roof structure is pivoted so that it can be swung aside (with the electrodes raised) for charging. The electrodes can be slipped in the clamp to allow for electrode wear. The electrode arms can also be raised and lowered individually by hydraulic or winch systems, and the electrode height above the melt is controlled by feedback signals derived from the arc voltage and current. The electrodes are made of coated graphite and can be up to 0.6 m diameter, with connections to the busbars made using water-cooled flexible conductors so that the roof can be moved.

The substation for a large arc furnace is normally adjacent to the furnace itself and contains the furnace transformer, which normally has a star connected primary and an input voltage of 33 kV. The transformer must withstand very large electromechanical forces produced by the high short-circuit currents; it is oil cooled and has terminations brought out to which the flexible cables are connected. The furnace power is varied by on-load tap changing. Electrical contact to the electrodes is made by a large copper pad contained in the electrode clamp connected in water cooled busbars which rise and fall with the furnace electrodes. Various configurations have been adopted to ensure that the geometry remains as nearly symmetrical as possible, independent of the busbars, to minimise out-of-balance currents. The furnace electrodes are normally connected in delta, and where very high currents are used, the delta is closed at the electrode clamp in order to minimise the effects of reactance in the transformer secondary circuit.

Economies of scale have resulted in progressively larger arc furnaces with ratings in excess of 100 MVA and increasing power inputs per tonne to reduce cycle times; the capacities of these units are more than 150 t. Further increase in size is limited by the need to tilt the furnace, the electrode diameter required, the inductive reactance of the circuit and the difficulties in raising and lowering the large electrodes independently. Operation with d.c. is claimed to give increased utilisation of the furnace, reduced noise and flicker and less wear of refractories and electrodes: it is not affected by the inductance of the furnace connections. This technique is currently being studied. Continuous feeding of pelletised prereduced iron or fragmented scrap is also being investigated as a method of overcoming some of the limitations involved in scaling up conventional arc furnaces. This type of feed eliminates the need to remove the roof for charging and to tilt the furnace for pouring.

21.8.4.2 Indirect arc furnace

The indirect arc furnace relies on radiation for heat transfer to the molten metal and the refractory lining from an arc drawn between two electrodes on the axis of a cylindrical horizontal shell. The furnace rocks about its axis so that the refractory lining is washed with molten metal; this assists heat transfer to the melt

and cools the lining. The largest size manufactured is about 1 t capacity, with a power rating of about 1 MW. Melting and refining can be carried out in the same unit, and the furnace has been used mainly for melting non-ferrous metals and cast-iron, but it has been superseded by channel and coreless induction furnaces.

21.8.4.3 Submerged arc processes

The submerged arc process is not essentially an arc process, as heating occurs also by direct resistance with, perhaps, some limited heating from arcs and sparks during interruption of the current path. The principal applications are for reducing highly endothermic ferroalloys of high melting point, such as ferro-manganese, nickel, chrome, silicon, tungsten and molybdenum, which are subsequently remelted in arc furnaces to produce special alloys.

The design of a submerged arc furnace depends on its application. In principle it is a dished vessel (*Figure 21.22*), brick lined, as with the arc furnace. But there the similarity ends: the

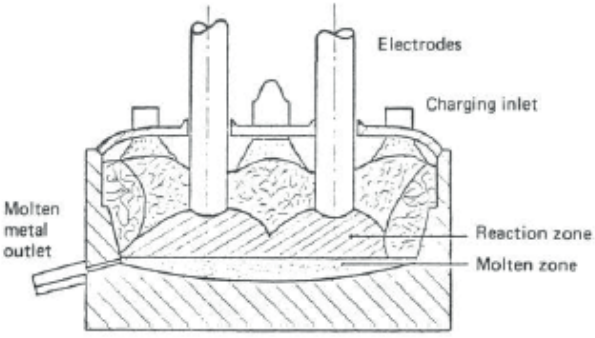

Figure 21.22 Submerged arc smelting furnace

dish and the roof are axially fixed, although the roof, together with the electrodes, may rotate. The furnace is charged through ports in the roof, and molten metal and slag flow from the furnace continuously. The electrodes are of the Soderberg type, formed *in situ* by pouring a mixture of pitch and tar plus anthracite into a steel tubular shell. The process is carried out several metres above the furnace, and as the electrode is lowered, it bakes, so driving off the volatile binding. By the time it enters the furnace it is a solid mass. Electrodes capable of carrying very high currents, up to 120 kA, can be produced in this way.

21.8.4.4 Vacuum arc furnace

The vacuum arc furnace (*Figure 21.23*) is used primarily for remelting metals of very high quality, including titanium, tantalum, niobium, hafnium, molybdenum, tungsten, zirconium and some steel and nickel alloys. Ingots of up to 100 t can be produced. The furnace operates at low pressure, down to about 0.01 Pa, and very effective degassing of the droplets of molten metal (which have a high surface area) occurs. The ingot forms a molten 'skull' which freezes in contact with the copper mould, thus eliminating contamination from refractory linings and minimising thermal stresses and piping at the ends. Impurities are carried through the ingot and collect in the molten pool on the surface. The electrode is either prefabricated or melted first in a vacuum induction furnace; the arc is d.c. and operates with a current of 10–25 kA and a voltage of 20–30 V. A low voltage is used to prevent the arc attaching to the walls of the vessel, and an additional field coil, which interacts with any radial component

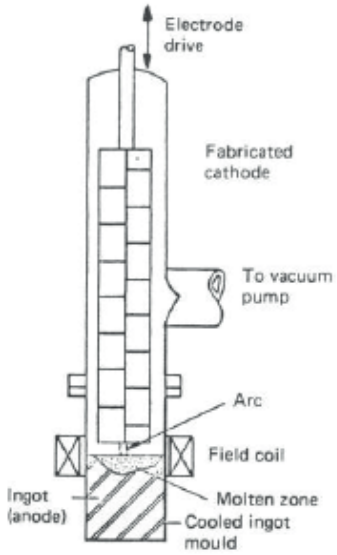

Figure 21.23 Vacuum arc furnace

of arc current, tends to help the stabilising effect and produces a strong stirring action.

21.8.4.5 Electroslag refining

Electroslag refining (*Figure 21.24*) is directly competitive with vacuum arc processes for materials not unduly reactive in air. A high degree of refining, not possible with the vacuum arc process, can be obtained, since the droplets of molten metal penetrate through the molten slag, enabling desulphurising to be carried out and oxide inclusion to be reduced. The process, like the vacuum arc furnace, forms a molten skull and has similar advantages.

The electroslag refining process is essentially one of resistance heating, since it relies on electrical conduction in the molten slag. Single- or 3-phase operation (using three electrodes over one ingot) is possible. The operating voltage is kept to the range 40–60 V to prevent formation of arcs, and currents of up to 3 kA are used. Operation is controlled by limiting the voltage and keeping the electrode immersed in the electrically conducting slag in order to avoid drawing an arc. The slag composition is carefully controlled to maintain its electrical conductivity and to allow it to refine the molten metal droplets. Cylindrical and slab

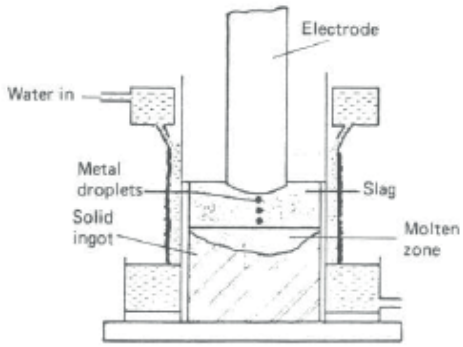

Figure 21.24 Electroslag refining furnace

ingots can be produced: typical ingot diameters are 350 mm (single-phase), 900 mm (3-phase), with a melting rate of 180–360 kg/h at 360 kVA (single-phase) or up to 6 MVA at 180 V and 18 kA (3-phase); thus ingots of up to 15 t can be produced.

21.8.4.6 Electron beam furnace

Electron beams are used for welding, melting and the production of evaporated coatings. The beam is obtained from a heated filament or plate and is accelerated in an electron gun by a high electric field produced by one or more annular anodes. Electrons on the axis of the gun pass through the final anode at very high velocities (e.g. 85×10^6 m/s at 20 kV). The electron gun and chamber are kept at a low pressure of around 0.001 Pa and, as little energy is lost from scatter or production of secondary electrons, practically all the kinetic energy of the beam is converted to heat at the workpiece; thus, the conversion efficiency of electrical energy input to thermal energy in the workpiece is very high. The electron beam furnace (*Figure 21.25*) utilises a cooled ingot mould in the same way as the vacuum and electroslag furnaces.

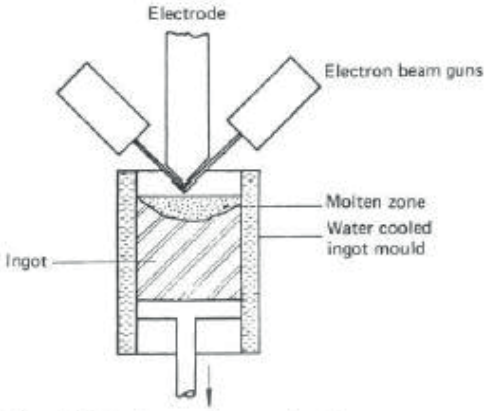

Figure 21.25 Electron-beam melting furnace

Ingots, slabs, tubes, castings, pellets and powder can be produced. One system, shown in *Figure 21.25*, comprises one, two or three guns arranged around a consumable electrode. Individual power ratings up to 400 kW are possible, which enables total power inputs of up to 1.2 MW and melting rates of 500 kg/h to be obtained.

21.9 Dielectric heating

Process heating of non-metal materials can present a difficult production problem, especially when the material is a poor thermal conductor. In these circumstances high heating rates using conventional methods of thermal radiation, conduction or convection imply high surface temperatures: as these may damage the material, heating must proceed slowly. The electrical conductivity of the materials is inevitably low, making heat generation by I^2R effects impracticable. It many instances dielectric loss mechanisms can be used for heating. As the heat is not conducted through the surface, high throughputs can be achieved without damage to the product.

The rate P of energy dissipation by dielectric loss in a non-conducting material of absolute permittivity $\varepsilon = \varepsilon_r \varepsilon_0$ and a loss tangent $\tan\delta$ is

$$P = 2\pi f E^2 \varepsilon \tan\delta \quad \text{W/m}^3$$

at a frequency f. For a high heating rate the frequency ω, the electric field strength E and the loss factor $\varepsilon \tan\delta$ must all be large.

Although all forms of dielectric polarisation are effective, the most significant is usually that which occurs with dipolar materials. Dielectric heating is therefore important in the processing of materials which have a high loss factor. It can also be used in the selective heating of one compound in a mixture of two materials which have substantially different values of the parameter: a typical example is in drying processes. *Table 21.7* indicates the loss factor for some typical materials, and illustrates the wide differences which can occur between substances which appear similar. *Table 21.7* also shows the influence of frequency

Table 21.7 Typical loss factor and frequency relation

Material	*Temperature* (°C)	*Frequency* (MHz)			
		1.0	*10*	*100*	*3000*
Ice	—	0.50	0.067	—	0.003
Water	1.5	1.6	0.17	0.61	25
	15	2.5	—	—	16
	65	5.6	—	—	4.9
	95	7.9	0.72	0.17	2.4
Porcelain	25	0.015	0.013	0.016	0.028
Glass (borosilicate)	25	0.002	0.003	0.004	0.004
(soda-silica)	25	0.07	—	0.051	0.066
Nylon (610)	25	0.07	0.06	0.06	0.033
	84	0.76	0.43	0.23	0.10
PVC (QYNA)	20	0.046	0.033	0.023	0.016
	96	0.24	0.14	0.086	—
(VG5904)	25	0.60	0.41	0.22	0.10
(VU1900)	25	0.29	0.17	0.087	0.015
Araldite (E134)	25	0.34	0.41	0.48	0.15
(adhesive)	25	0.11	0.12	0.11	0.07
Rubber (natural)	25	0.004	0.008	0.012	0.006
Neoprene (GN)	25	0.54	0.94	0.54	0.14
Wood (fir)	25	0.05	0.06	0.06	0.05
Paper (royal-grey)	25	0.11	0.16	0.18	0.15
	82	0.08	0.14	0.19	0.23
Leather (dry)	25	0.09	0.09	0.12	—
(15% water)	25	0.78	0.49	0.45	—

and temperature on the loss factor. The former is due to the well-known dependence of both real and complex parts of the permittivity on frequency, and the latter to the fact that an increase in temperature increases the material's internal energy, affecting the polarisation mechanism.

The frequency should theoretically be chosen to maximise the product of frequency and loss factor. However, practical limitations dictate that unless the equipment is adequately screened (often difficult in an industrial situation), the frequencies which can be used are limited to those in the ISM Band (*Table 21.8*).

21.9.1 Radiofrequency power sources and applicators

The power source for heating in the range 10–500 MHz is a class C amplifier/oscillator. At these frequencies cavity construction is normally used for the tank circuit (*Figure 21.26*). Industrial radiofrequency triodes are used, currently available in power ratings up to 500 kW. The load is loosely coupled to the source, typical values of loaded Q being of the order of 100, and the need to observe the allowable bandwidths means that a high degree of

Application Guidance Notes are for information purposes only. STAMFORD | AvK reserves the right to change the contents of Application Guidance Notes without notice and shall not be held responsible for any subsequent claims in relation to the content.

stamford-avk@cummins.com
www.stamford-avk.com

Copyright 2024, Cummins Generator Technologies Ltd. All rights reserved.
Cummins and the Cummins logo are registered trade marks of Cummins Inc.
STAMFORD and AvK are registered trademarks of Cummins Generator Technologies Ltd.

STAMFORD | AvK ™

POWERING TOMORROW, TOGETHER