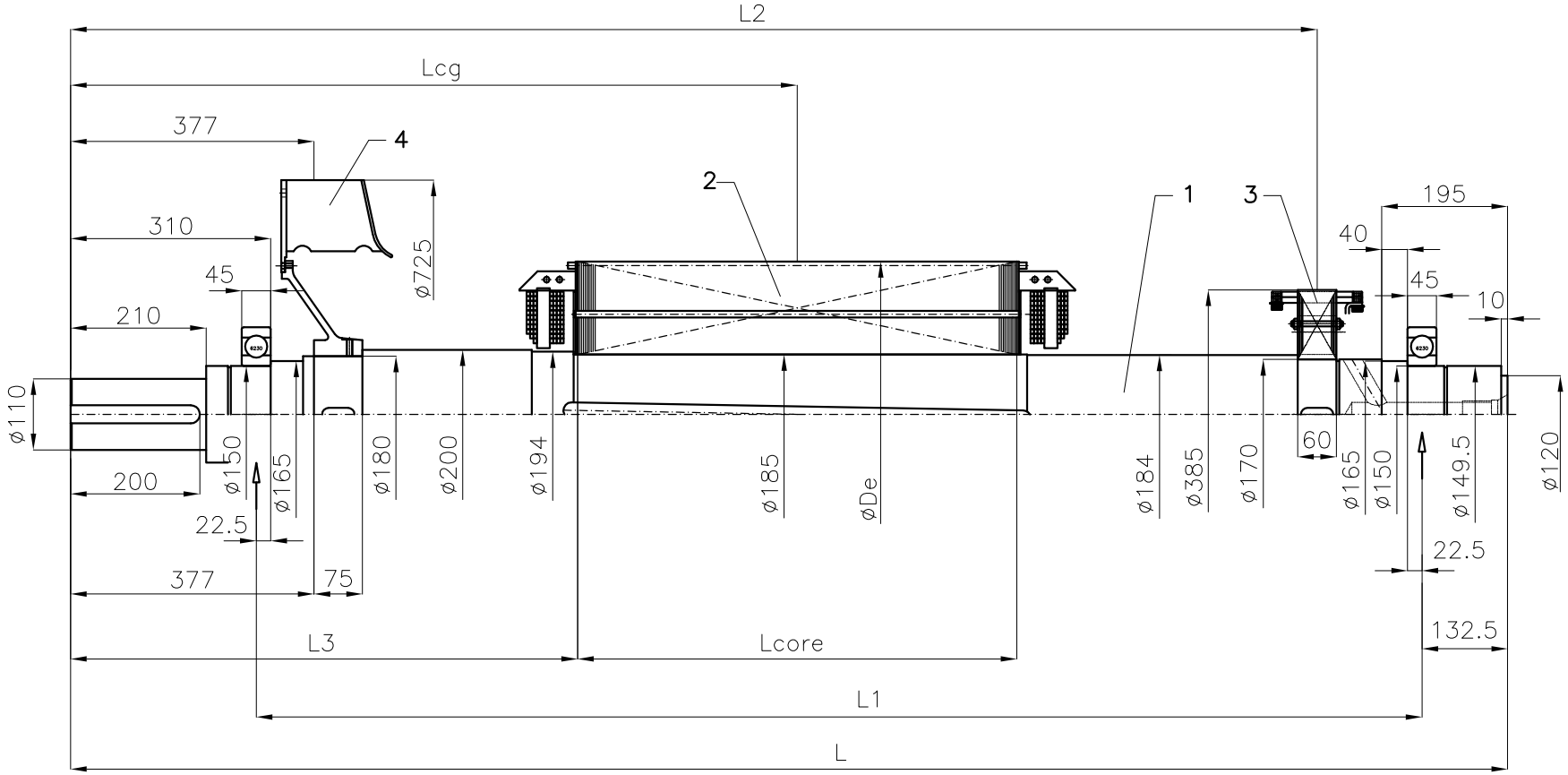

Var.	Core size	Poles	Rated volth U (kV)	Frecquency (Hz)	L core	Lcg	L1	L2	L3	L	øD ex	Shaft		Main rotor		Rotor assy.	
												J (kgm²)	Weight (kg)	J (kgm²)	Weight (kg)	J (kgm²)	Weight (kg)
V01	g	4	6.3 / 6.6 / 6.6	50/50/60	430	1000	1805	1930	785	2225	473	1.7	422	15.1	487	23.3	1910
V02	g		3.3 / 4.16	50/60	450	1010								15.7	505	23.9	1072
V03	h		3.3;6.3;6.6;10.5/4.16;6.6	50/60	550	1060								18.8	609	27	1176
V04	h		11	50	570	1070								19.4	628	27.6	1195
V05	i		3.3;6.3;6.6;/4.16;6.6	50/60	650	1110								21.9	710	30.1	1277
V06	i		10.5÷11	50	680	1125								22.8	740	31	1307

No.	Denomination	~J [kgm²] (Moment of inertia)	Weight [kg]
1	Shaft	table	table
2	Main rotor	table	table
3	Exciter rotor package	1.5	60
4	Fan	5	85
5	Rotor assembly	table	table

Issue	MOD.	ALTERATION	DATE	DRAWN
D				
C				
B				
A		Original issue /desen original		

© CGT ROMANIA Copyright reserved Alle rechte vorbehalten CGT RUMANIEN Acest desen este proprietatea CGT ROMANIA Tous droits de reproduction reserves de CGT ROMANIA

FILE: 1/1 (DWG)
Scale: 1:20
DATE: 29.11.2013
DESIGNED M.P.
CHECKED D.B.

Moment of inertia
Rotor assembly
DIG 110-4

AvK

PART No. R 110-01
Issue A