AutoCad

REL NO	REV	DETAILS	DWN	CKD	APVD	DATE
ECO-130105	G	AVR VIEWS & NOTES UPDATED	NNG	APM	SMH	15NOV12

CORE	C OF G
C	463
D	483
E	504

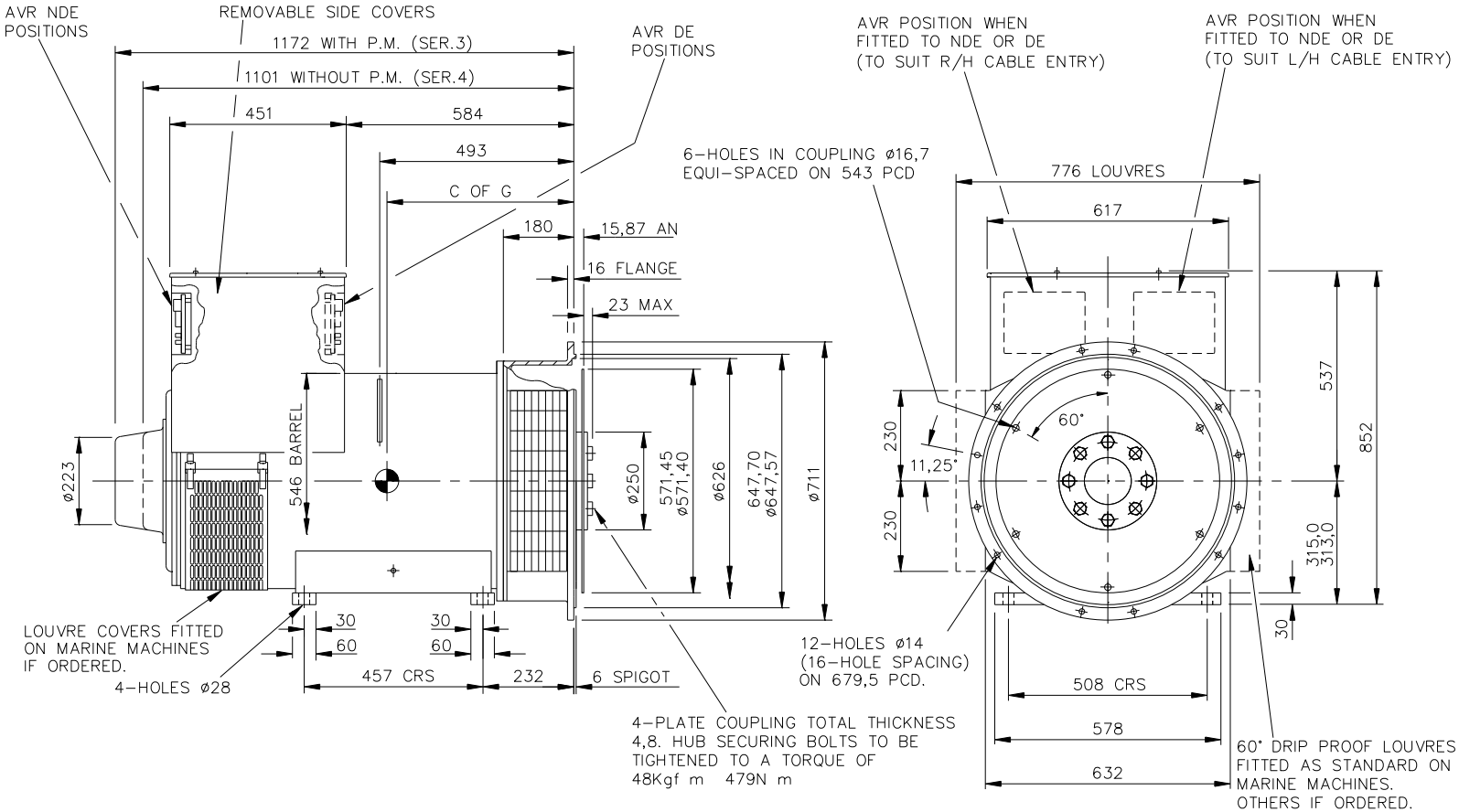

NOTE: –
CUSTOMER MAY CUT CABLE ENTRY HOLES AS REQUIRED IN ANY OF THE FOUR TERMINAL BOX SIDES SUBJECT TO POSITION OF AVR, TERMINALS, ETC.

UNLESS SPECIFIED ALL DIMENSIONS ARE IN MILLIMETERS

DO NOT SCALE PRINT

CONFIDENTIAL
PROPERTY OF CUMMINS GENERATOR TECHNOLOGIES

DRAWN	SMC	
CHECKED	SMC	
APPROVED	CR	
DATE	10JUL00	
SCALE	1:10	FIRST USED ON ---

SITE CODE: STA

CUMMINS GENERATOR TECHNOLOGIES

DRAWING, GENERAL ASSEMBLY
HC4 CDE 1-BRG SAE0/18 GA

DWG SIZE		SHEET	REV
A4	41-4537	1	G