66-2103	ISSUE D
FIRST W.O.	

IF IN DOUBT-ASK
DO NOT SCALE

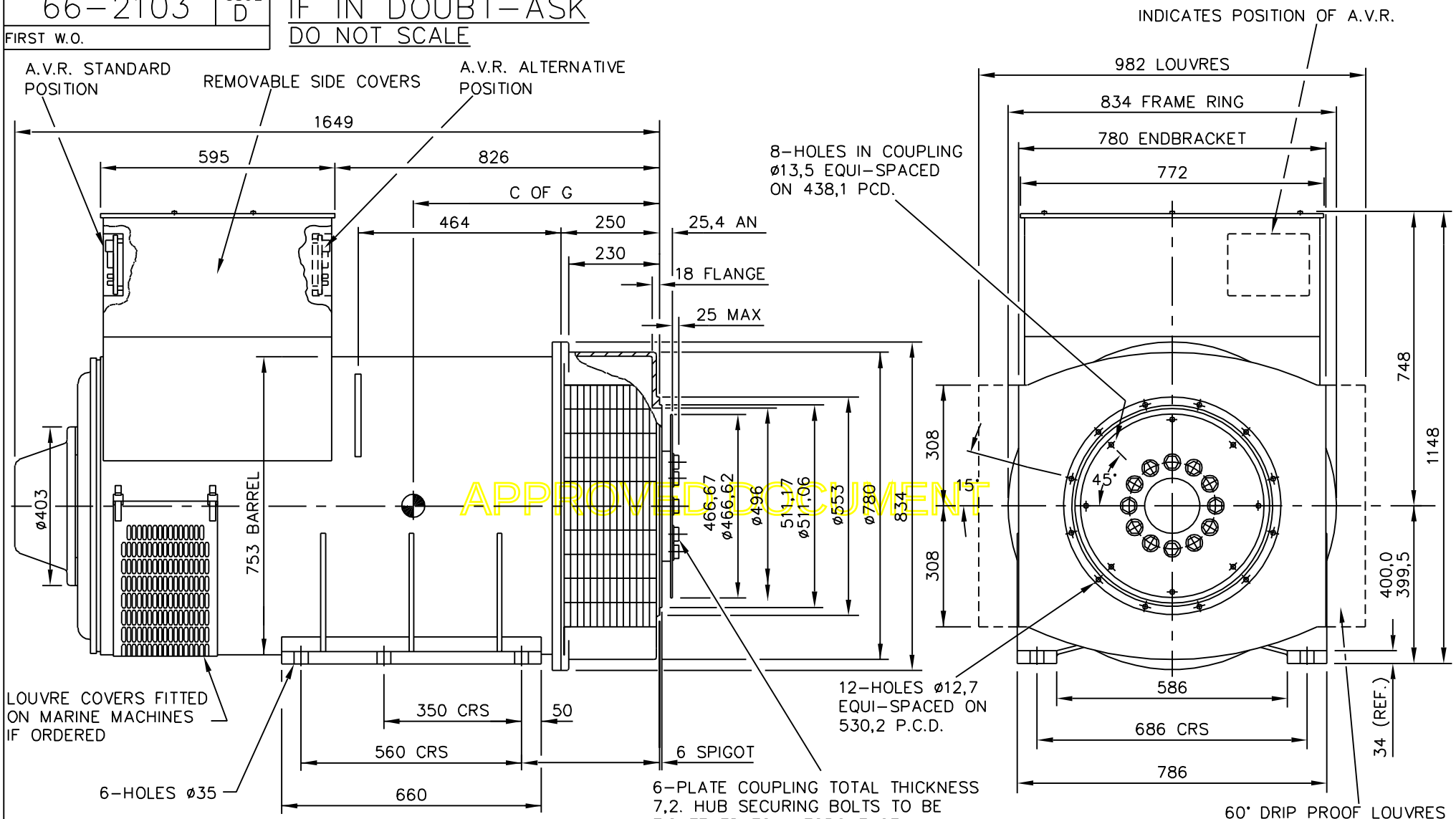

APPROVED DOCUMENT

CORE	C OF G
K	730

NOTE;-
CUSTOMER MAY CUT CABLE ENTRY HOLES AS REQUIRED IN ANY OF THE FOUR TERMINAL BOX SIDES SUBJECT TO POSITION OF AVR,TERMINALS ETC.

MOD'N	ISSUE	DRAWN	DATE	ALTERATION
4-9486-04	D	SAP	21/04/2008	ADD FOOT REFERENCE THICKNESS
4-8664-02	C	USD	15/09/2006	CHANGE OF COMPANY NAME
4-7147-11	B	USD	09/02/2006	NDE LOUVRED PANEL REPLACED BY MESH COVER
4-2766-02	A	AJB	06/11/2000	ORIGINAL ISSUE

CERTIFIED PRINT (ONLY IF SIGNED)		
BY		
DATE		
DRAWN	AJB	06/11/2000
CH'D	PJW	22/04/2008
APP'D	SMH	22/04/2008

HC/CG6-1K(4 POLE) ALTERNATOR
ADAPTOR - SAE1
COUPLING - SAE14
STANDARD T/BOX

CUMMINS GENERATOR TECHNOLOGIES LTD
STAMFORD ENGLAND

SCALE 1:10

FIRST W.O.

UNIT OF MEASUREMENT MILLIMETRES (mm)

66-2103

ISSUE D