REL NO	REV	NO	REVISION	DWN	CKD	APVD	DATE
ECO-164765	A	1	RELEASED FOR PRODUCTION	PP	AB	B_SURVE	12SEP16

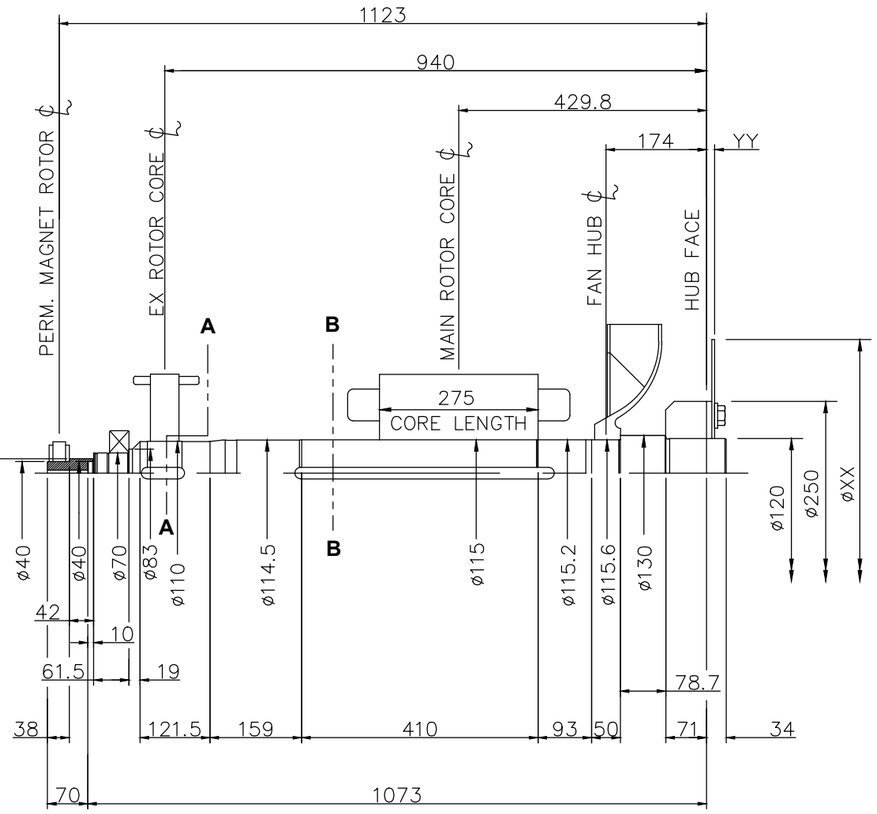

NOTES:

1. SHAFT STIFFNESS: –
   THE STIFFNESS OF THE SHAFT BETWEEN THE MAIN ROTOR CORE ℄ AND THE COUPLING HUB FACE ℄ IS 41.98 x 10^6 kgcm/radian
   (STIFFENING EFFECT OF MAIN ROTOR CORE IS NOT INCLUDED IN THIS FIGURE)

2. SHAFT MATERIAL: –
   STEEL – 080M40 TO BS970 PART 1 (APPROVED BY MARINE AUTHORITIES WHEN APPROPRIATE)
   MAXIMUM RECOMMENDED VIBRATORY STRESS LEVEL IN THE SHAFT IS 34.47 X 10^6 N/m² FOR SPEED RANGE OF 0.95 TO 1.1 X NOMINAL SPEED AND 68.94 X 10^6 N/m² FOR RUN THROUGH CONDITIONS, FOR INDUSTRIAL MACHINES.
   FOR MARINE AUTHORITIES, THEIR APPROPRIATE RULES WILL APPLY.
   CUMMINS GENERATOR TECHNOLOGIES SHOULD BE NOTIFIED OF ANY ROTORS NOT COMPLYING WITH THESE RULES

3. CUMMINS GENERATOR TECHNOLOGIES BALANCE ROTORS TO COMPLY WITH INTERNATIONAL STD ISO 1940 GRADE 2.5 AND BS 6861 PART 1 GRADE 2.5
   FOR UNBALANCED MAGNETIC PULL (U.M.P.) REFER TO THE GENERATOR MANUAL

COMPONENT	Wt kg	WR² kgm²
EX.ROTOR	31.290	0.5100
MAIN ROTOR	172.090	2.4450
FAN	9.910	0.2630
SHAFT	87.191	0.1450
HUB	18.507	0.1779
P.M. STUB SHAFT	0.955	0.0002
P.M. EX. ROTOR	4.260	0.0120
TOTAL	324.203	3.5531

COUPLING SAE No	COUPLING DIMEN's		COUPLING ASSEMBLY WEIGHT kg	COUPLING STIFFNESS 4–PLATES kgcm/rad	COUPLING DISC WR² kg m²
	XX	YY			
ø11.5"	352	23.8	12.08	755.8x10^6	0.055
ø17.75"	450.9	2.5	9.11	662.4x10^6	0.150
ø14"	467	9.5	11.66	622.8x10^6	0.172
ø18"	572	0.0	12.07	570.0x10^6	0.386

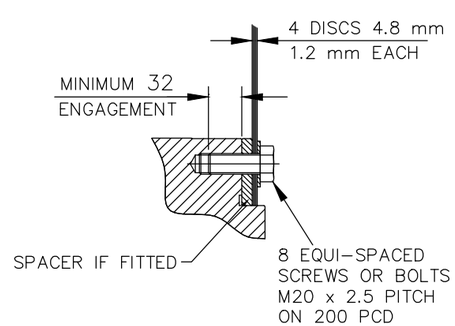

SECTION THRO' SHAFT
END AND COUPLING
SCREWS OR BOLTS

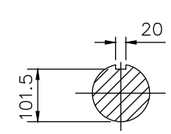

SECTION **A-A**

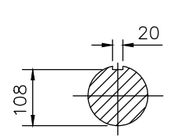

SECTION **B-B**

CONVERSION FACTORS		
TO CONVERT	TO	DIVIDE BY
kg	lb	0.453592
kg m²	lb ft²	0.04214
kgcm/rad	lbin/rad	1.1521246
N/m²	lbf/in²	6894.76

UNLESS OTHERWISE SPECIFIED, ALL DIMENSIONS ARE IN MILLIMETERS

SCALE NTS

SIM TO L15–12485

DO NOT SCALE PRINT

THIS DOCUMENT (AND THE INFORMATION SHOWN THEREON) IS CONFIDENTIAL AND PROPRIETARY AND SHALL NOT BE DISCLOSED TO OTHERS IN HARD COPY OR ELECTRONIC FORM, REPRODUCED BY ANY MEANS, OR USED FOR ANY PURPOSE WITHOUT WRITTEN CONSENT OF CUMMINS INC.

DRAWN P_PACHPUTE
CHECKED A_BIRARI
APPROVED B_SURVE
DATE 12SEP16

FOR INTERPRETATION OF DIMENSIONING AND TOLERANCING, SEE ASME Y14.5–2009

FIRST USED ON S4

SITE CODE STA

CUMMINS GENERATOR TECHNOLOGIES

DRAWING, TORSIONAL

S4 C 1–BRG

DWG SIZE A0

A056E026

CAD SHEET 1 of 1